REQUEST FOR QUOTE

OHUTA BEACH PHASE 1 PROJECT

WABASHA COUNTY | LAKE CITY, MN

SEPTEMBER 11, 2020

Prepared for:
Lake City
205 West Center Street
Lake City, MN 55041

WSB PROJECT NO. 015605-000

CERTIFICATION

I hereby certify that this plan, specification, or report was prepared by me or under my direct supervision and that I am a duly licensed Landscape Architect under the laws of the State of Minnesota.

Steven D. Foss, PLA

Date: September 11, 2020 Lic. No. 56582

I hereby certify that this plan, specification, or report was prepared by me or under my direct supervision and that I am a duly licensed professional engineer under the laws of the State of Minnesota.

James M. Soltis, PE

Date: September 11, 2020 Lic. No. 54823

TABLE OF CONTENTS

TITLE SHEET

CERTIFICATION

TABLE OF CONTENTS

NOTICE OF REQUEST FOR QUOTE
- GENERAL REQUIREMENTS

INSURANCE REQUIREMENTS

BID FORM

SPECIFICATIONS
- DIVISION 2 –
  - SECTION 2503 PIPE SEWER (SANITARY)
  - SECTION 2504 WATERMAIN CONSTRUCTION
- DIVISION 26 – ELECTRICAL
  - SECTION 26 00 00 ELECTRICAL GENERAL PROVISIONS
- DIVISION 31 EARTHWORK
  - SECTION 31 10 00 SITE CLEARING
  - SECTION 31 20 00 EARTH MOVING
  - SECTION 31 23 19 DEWATERING
- DIVISION 32 EXTERIOR IMPROVEMENTS
  - SECTION 32 91 13 SOIL PREPARATION
  - SECTION 32 92 00 TURF AND GRASSES

APPENDIX A
- CONSTRUCTION CONTINGENCY PLAN

PLAN SET

Lake City
205 West Center Street
Lake City, MN 55041

NOTICE OF REQUEST FOR QUOTE

Ohuta Beach Phase 1 Project
Lake City

On behalf of Lake City, this notice is hereby given that quotes will be considered by Lake City for the Ohuta Beach Phase 1 Project until 2:00 p.m. local time on Wednesday, September 30, 2020. Quotes will not be publicly opened.

All quotes must be delivered to WSB via email to sfoss@wsbeng.com or delivered to: Steve Foss, 178 9th Street East, Suite 200, Saint Paul, MN 55101 by the deadline date established.

701 XENIA AVENUE S | SUITE 300 | MINNEAPOLIS, MN | 55416 | 763.541.4800 | WSBENG.COM

Notice of Request for Quotes

I. GENERAL

A. Request for Quote

Lake City is inviting quotes for Ohuta Beach Phase 1 Project as noted on the included plan sheets.

B. Scope of Project:

The project includes removals, grading, construction of aggregate pads, utility improvements, and site restoration.

C. Instructions for Quote

All Quotes must include or conform to the following requirements:

- Written in ink or typewritten on the quote form supplied (all information must be completed and addressed).
- Complete and provide information complying with the following documents (included):
  - Affidavit of Non-collusion
  - Contractor Verification Form
  - Insurance Requirements
- Quotes must be delivered to WSB via email to sfoss@wsbeng.com or delivered to: Steven Foss, 178 9th Street East Suite 200, Saint Paul, MN 55101 by the deadline date established.

Questions about the RFQ, Ohuta Beach Phase 1 Project, and/or the included plan sheets should be directed to Steven Foss, WSB, via email at sfoss@wsbeng.com or at 612-352-8453.

D. Quality Control

No work will be allowed without notifying the material testing agency a minimum of twenty-four (24) hours beforehand.

Testing of materials and/or densities will be facilitated and paid for by the Owner, unless specified otherwise. Any retesting due to failures shall be at the expense of the Contractor.

E. Coordination

The contractor shall be responsible for all public and private utility coordination to complete the work (incidental to the project).

The contractor shall be responsible for coordination with the city and the marina, as well as providing clear passage for vehicular access for residents and activities associated with the marina (incidental to the project).

Marina Contact
Jeff Brand
Marina Administrator
Email: jeff@lcmarina.net
Phone: (654) 345-4211

City Contacts
Scott Jensen
Public Works Director
Email: sjensen@ci.lake-city.mn.us
Phone: (651) 345-6850

Megan Smith
Planning and Community Development Director
Email: msmith@ci.lake-city.mn.us
Phone: (651)345-6807

Neil Postians
Electric Superintendent
Email: npostians@ci.lake-city.mn.us
Phone: (651) 345-6851

Tim Dick
Water/Wastewater Superintendent
Email: tdick@ci.lake-city.mn.us
Phone: (651)345-6854

F. Work Hours
The working hours shall be 7:00 AM – 7:00 PM Monday – Saturday.

G. Warranty
The contractor awarded with this project shall provide a two-year warranty on all improvements as shown on plans and noted below.

H. Quote Award
Award will be made by Lake City. The City reserves the right to reject any and all quotes, waive any irregularities and award a contract that is in the best interest of Lake City. Once a quote is accepted and awarded, Lake City reserves the right to work with the selected contractor to further customize and revise plans to meet project budget. Coordination will be made following final acceptance in accordance to Lake City's contracting requirements.

I. Project Schedule Requirements
The Notice to Proceed is anticipated to be issued by the Owner on **October 15, 2020**.

The Work will be **substantially completed** on or before **April 15, 2021**.

The Work will be **completed** on or before **April 29, 2021**.

CITY OF LAKE CITY
POLICY ON INSURANCE REQUIREMENTS
FOR CONTRACTORS AND CONSULTANTS

Contractors shall maintain commercial general liability (CGL), and if deemed necessary by the City Attorney and the City's insurance agent, commercial umbrella insurance, with a limit of not less than $1,000,000 each occurrence. If such CGL insurance contains a general aggregate limit, the general aggregate limit shall be not less than $2,000,000 and the aggregate limit shall apply on a per-project basis. The CGL insurance shall cover liability arising from premises, operations, independent contractors, products-completed operations, personal injury and advertising injury, and contractually-assumed liability. The City and WSB shall be named as an additional insured under the CGL. For projects or services that have costs of less than $500,000, these requirements may be modified if deemed appropriate by the City Attorney and the City's insurance agent.

Contractors shall maintain automobile liability insurance, and if deemed necessary by the City Attorney and the City's insurance agent, umbrella liability insurance with a limit of not less than $1,000,000 each accident. If such insurance contains a general aggregate limit, the general aggregate limit shall be not less than $2,000,000. The insurance shall cover liability arising out of any auto, including owned, hired, and non-owned autos. For projects or services that have costs of less than $500,000, these requirements may be modified if deemed appropriate by the City Attorney and the City's insurance agent.

Contractors shall provide the City with a certificate of insurance showing evidence of workers' compensation coverage or provide evidence of qualification as a self-insurer of workers' compensation.

Contractors or consultants performing professional services for the City (e.g. engineers, architects, attorneys, etc.) must carry professional liability insurance coverage in their respective fields.

A certificate of insurance acceptable to the City shall be filed with the City prior to the commencement of the work. The certificate and the required insurance policies shall contain a provision that the coverage afforded under the contract will not be canceled or allowed to expire until at least 30 days prior written notice has been given to the City.

adopted 9.14.15

Contractor's Business Name: _____

Address: _____

_____

Phone No: _____

Fax No: _____

QUOTE / BID FORM

PROJECT IDENTIFICATION: **OHUTA BEACH PHASE 1 PROJECT**

BIDS DUE: **2:00 P.M. – WEDNESDAY, September 30, 2020**

This bid is submitted to:

WSB
ATTN: STEVEN FOSS
178 9th STREET EAST, SUITE 200
SAINT PAUL, MN 55101

(FORMAL CONTRACT AWARD WILL BE DETERMINED BY LAKE CITY)
MEGAN SMITH
205 WEST CENTER STREET
LAKE CITY, MN 55041

---

1. The undersigned **BIDDER** proposes and agrees, if this Bid is accepted, to enter into an agreement with **OWNER** on the form included in the Contract Documents to perform and furnish all Work as specified or indicated in the Contract Documents for the Contract Price and within the Contract time indicated in this bid and in accordance with the other terms and conditions of the Contract Document.

2. **BIDDER** accepts all of the terms and conditions of the Advertisement or Invitation to Bid and Instruction to Bidders. This Bid will remain subject to acceptance for sixty (60) days after the day of Bid opening. **BIDDER** will sign and submit the Agreement and other documents required by the Bidding Requirements within fifteen (15) days after the date of **OWNER'S NOTICE OF AWARD.**

3. In submitting this bid, **BIDDER** represents, as more fully set forth in the Agreement, that:

   (a) **BIDDER** has examined copies of all the Bidding Documents and of the following Addenda (receipt of all of which is hereby acknowledged):

Date	Number
_____	_____
_____	_____
_____	_____
_____	_____

(b) **BIDDER** has familiarized itself with the nature and extent of the Contract Documents, Work, site, locality, and all local conditions and laws and regulations that in any manner may affect cost, progress, performance or furnishing of Work.

(c) **BIDDER** has obtained and carefully studied (or assumes responsibility for obtaining and carefully studying) all such examinations, investigations, explorations, tests and studies (in addition to or to supplement those referred to in (c) above) which pertain to the subsurface or physical conditions at the site or otherwise may affect the cost, progress, performance or furnishing of the work as **BIDDER** considers necessary for the performance of furnishing the work at the Contract Price, within the Contract Time and in accordance with the other terms and conditions of the Contract Documents.

(d) **BIDDER** has reviewed and checked all information and data shown or indicated on the Contract Documents with respect to existing Underground Facilities at or contiguous to the site and assumes responsibility for the accurate location of said Underground Facilities. No additional examinations, investigations, explorations, tests, reports or similar information or data in respect of said Underground Facilities are or will be required by **BIDDER** in order to perform and furnish the Work at the Contract Price, within the Contract Time and in accordance with the other terms and conditions of the Contract Documents.

(e) **BIDDER** has correlated the results of all such observations, examinations, investigations, explorations, tests, reports and studies with the terms and conditions of the Contract Documents.

(f) **BIDDER** has given **ENGINEER** written notice of all conflicts, errors, discrepancies that it has discovered in the Contract Documents and the written resolution thereof by **ENGINEER** is acceptable to **BIDDER.**

(g) This Bid is genuine and not made in the interest of or on behalf of any undisclosed person, firm or corporation and is not submitted in conformity with any agreement or rules of any group, association, organization or corporation; **BIDDER** has not directly or indirectly induced or solicited any other **BIDDER** to submit a false or sham Bid; **BIDDER** has not solicited or induced any person, firm or corporation to refrain from bidding; and **BIDDER** has not sought by collusion to obtain for itself any advantage over any other **BIDDER** or over **OWNER.**

(h) Any other representation as required by Laws and Regulations.

4. **BIDDER** WILL COMPLETE THE WORK FOR THE FOLLOWING UNIT PRICE(S):

(Quantities are indicated for the convenience of the Bidder. Final Payment will be based on actual quantities.)

BID FORM PROPOSAL

OHUTA BEACH PHASE 1 PROJECT
LAKE CITY, MINNESOTA

PROJECT OWNER:
Lake City
Attn: Megan Smith
205 West Center Street
Lake City, MN 55041

SUBMIT TO CONSULTANT:
WSB
Steven Foss
178 9th Street East, Suite 200
Saint Paul, MN 55101

SUBMITTAL DEADLINE
Submit your bid on or before 2 p.m. on September 30, 2020

Note: this will NOT be a public opening and reading of the bids. The City will summarize and provide the bid results to the companies that submit proposals within 30 days.

SUBMITTED BY:

Name: _____
Address: _____
_____
_____

Contact: _____ Telephone: _____
Email: _____

OFFER: Bidder will complete the work according to the following:

(a) The quantities indicated for **"UNIT PRICE"** bid items are for the convenience of the Bidder and are not guaranteed. **"UNIT PRICE"** bids shall include all labor, materials, storing, equipment, overhead, profit, insurance, tags, etc. necessary to cover the work described in the contract documents. Final payment to the contractor for **"UNIT PRICE"** bid items shall be based on field measured quantities and the contractor's unit bid price for completing the work outlined in the contract documents.

(b) Each Bidder must verify or establish quantities and the extent of work to their own satisfaction for **"LUMP SUM"** bid items, and submit a total bid sufficient to cover all the work outlined in the contract documents. **"LUMP SUM"** bids shall include all labor, materials, storing, equipment, overhead, profit, insurance, tags, etc. necessary to cover the work described in the contract documents. Final payment to the contractor for **"LUMP SUM"** bid items shall be based on the contractor's bid price for completion of the work outlined in the contract documents.

(c) The bid form has the following schedules in the following order:

1) Base Bid Schedule

The contractor is required to provide a bid price for all schedules and bid items. Award of contract will be as stipulated under "Award of Contract" on the last page of this bid form.

Units Legend: **LS** = Lump Sum, **SF** = Square Feet, **SY** = Square Yard, **EA** = Each, **LB** = Pound, **PAIR** = Pair
LF = Lineal Feet, **FF** = Face Feet, **CY** = Cubic Yard (in place measure), **TN** = Ton, **GAL** = Gallon; **AC** = Acre

BASE BID SCHEDULE:

No.	Description:	Estimated Qty.	Unit	Unit Bid (In Dollars)	Total Bid (In Dollars)
1	**Mobilization**	1	LS		
2	**Construction Staking**	1	LS		
REMOVALS					
3	**Tree Removal** - complete, including removal of trees, stump grinding, and disposal	1	LS		
4	**Pavement Removal** - complete, including sawcutting, removal and disposal of all pavement and aggregate as shown on plans and details	20	SY		
5	**Sanitary Pipe Removal** - complete, including removal and disposal of pipe and services	200	LF		
EARTHWORK					
6	**On-Site Earthwork** - complete, including: 1) stripping, stockpiling, respreading, and fine grading all topsoil to required minimum settled depth; 2) common excavation and placement of subsoil materials to subgrade elevations in all work areas including trenching for all proposed utilities; 3) subsoil compaction beneath aggregate or paved areas, backfill and compaction in utility trenches, etc.; 4) grade maintenance as necessary for duration of construction period; and, 5) includes export of excess earthen material, unsuitable material, and hazardous material as necessary to achieve plan grades	1	LS		
UTILITIES IMPROVEMENTS					
7	Furnish and Install **8" Sanitary Sewer and 4" Sanitary Service Cleanouts** as indicated on plans, details and specifications.	300	LF		
8	Furnish and Install **8" Watermain and 3/4" Services** as indicated on plans, details and specifications.	280	LF		
9	Furnish and Install **Aggregate Base** as indicated on plans, details and specifications.	170	CY		
ELECTRICAL					
10	**Primary Cable Conduit** as indicated on plans, details, and specifications	1	LS		
11	**Transformer Pad** as indicated on plans, details, and specifications	1	LS		
12	**Pedestals and Electrical Distribution** as indicated on plans, details, and specifications	1	LS		
13	**Communication Conduit** as indicated on plans, details, and specifications	1	LS		

EROSION CONTROL & RESTORATION					
14	Furnish and Install **Sediment Control Log Type Wood Fiber** (includes maintenance throughout project & removal for restoration)	850	LF		
15	**Street Sweeping** as indicated on plans.	1	LS		
16	Furnish and Install **Tree Protection Fence** - complete	200	LF		
17	Furnish and Install **Turf Seed Mix & Hydromulch** as shown on plans and per specifications	1	LS		
				TOTAL BASE BID:	

OWNER'S RIGHT: The owner reserves the right to revise the scope of the work outlined in the contract documents. "Unit Price" bids in the base bid and alternate bid schedules shall prevail for changing quantities of work items from those indicated in the contract documents.

ADDENDA: The following Addenda have been received. The modifications to the Bid Documents noted therein have been considered and all costs thereto are included in the Bid price.

Addendum No. ___ Dated _____
Addendum No. ___ Dated _____
Addendum No. ___ Dated _____

CONTRACT TIME: The undersigned agrees to commence work under this contract upon receipt of written "Notice to Proceed" by the Owner (anticipated on October 15, 2020).

LIQUIDATED DAMAGES: The undersigned further agrees to pay the Owner as liquidated damages the sum of Five Hundred Dollars ($500.00) for each calendar day beyond the April 15, 2021 (specified substantial completion date) that the project is not substantially complete.

WITHDRAWAL OF PROPOSAL: This proposal is submitted after careful study of the Drawings and Specifications and from personal knowledge of the conditions, both surface and subsoil, at park site, which knowledge was obtained from the undersigned's own sources of information and not from any employee of the City of Arden Hills.

It is understood and agreed that proposal cannot be withdrawn within **sixty (60) calendar days** without the consent of the City. The City has the right to reject any or all proposals.

SUBMITTAL REQUIREMENTS: Each bidder shall be required to submit the following information and data. Information not submitted at the bid opening must be submitted prior to award of the contract.

1. Bid Form Proposal
2. Acknowledgment of receipt of addendum
3. Any other items specifically required by the contract documents.

AWARD OF CONTRACT: The contract for the work outlined in the contract document and this proposal form, will be awarded to the lowest qualified bidder. Lowest bid will be determined by the **TOTAL BASE BID PRICE.**

BID FORM SIGNATURE(S): Respectfully submitted,

Bidder is (Corporation) (Partnership) (Individual) (Joint Venture)
Bidder must select one of above and if a Joint Venture, each joint venturer must sign.

Firm _____

By _____

Title _____

Fed. Tax ID Number _____

Date _____

AFFIDAVIT OF NON-COLLUSION:

I hereby swear (or affirm) under the penalty for perjury:

1. That I am the **BIDDER** (if the bidder is an individual), a partner in the firm (if the bidder is a partnership) or an officer or employee of the bidding corporation having authority to sign on its behalf (if the bidder is a corporation);
2. That the attached bid or bids have been arrived at by the **BIDDER** independently, and have been submitted without collusion with, and without, any agreement, understanding, or planned common course of action with any vendor of materials, supplies, equipment or services described in the invitation to bid, designed to limit independent bidding or competition;
3. That the contents of the bid or bids have not been communicated by the **BIDDER**, or its employees or agents, to any person not an employee or agent of the **BIDDER**, or its surety, on any bond furnished with the bid or bids, and will not be communicated to any such person prior to the official opening of the bid or bids; and
4. That I have fully informed myself regarding the accuracy of the statements made in this affidavit.

Bidder: _____

Firm Making Bids: _____

Subscribed and sworn to before me
This ____ day of _____, 20__.

_____
Notary Public

My commission expires on:_____

5. **BIDDER** agrees that all work is to be completed in compliance with the contract documents.

6. The following documents are attached to and made a condition of the **BID** or should be included following award of quote.

   (a) A tabulation of Subcontractors, Suppliers, and other persons and organizations required to be identified in this Bid.

   (b) Affidavit of Non-Collusion.

   (c) Responsible Contractor Certificate.

7. Communications concerning this **BID** shall be addressed to the address of **BIDDER** indicated below.

8. The terms used in this **BID,** which are defined in the General Conditions of the Construction Contract included as part of the Contract Documents, have the meanings assigned to them in the General Conditions.

SUBMITTED ON:_____, 2020.

STATE OF MINNESOTA - RESPONSIBLE CONTRACTOR CERTIFICATE

Applies to all prime contracts in excess of $50,000

A responsible contractor is defined in Minnesota Statutes §16C.285, subdivision 3.

Any prime contractor or subcontractor who does not meet the minimum criteria under Minnesota Statutes §16C.285, subdivision 3, or who fails to verify that it meets those criteria, is not a responsible contractor and is not eligible to be awarded a construction contract for the project or to perform work on the project.

A false statement under oath verifying compliance with any of the minimum criteria shall render the prime contractor or subcontractor that makes the false statement ineligible to be awarded a construction contract for the project and may result in termination of a contract awarded to a prime contractor or subcontractor that makes a false statement.

A prime contractor shall submit to the contracting authority upon request copies of the signed verifications of compliance from all subcontractors of any tier pursuant to subdivision 3, clause 7.

By signing this statement, I, _____(typed or printed name), _____(title) certify that I am an owner or officer of the company and do verify under oath that my company is in compliance with each of the minimum criteria listed in the law.

_____

(*name of the person, partnership or corporation submitting this proposal*)

_____

(*business address*)

Signed: _____ _____

(bidder or authorized representative) *Date*

INTRODUCTION

These General Requirements amend or supplement Division II of the Minnesota Department of Transportation (MnDOT) Standard Specifications for Construction (2018 Edition).

S-2 2503 - PIPE SEWER (SANITARY)

This work shall consist of furnishing and installing pipe sewers and fittings in accordance with the Plans, the applicable MnDOT Standard Specifications, and the following:

A. Pipe Sewer options for this Project are listed in the Plan.

B. If pipe options are allowed, measurement and payment will be made by the length and type of pipe indicated on the Plan, regardless of the type of material installed. No adjustments for any additional work required by the Contractor choice of material.

C. All common excavation materials that is displaced by new pipe and bedding materials shall be removed from the project. Removal of this material is included in the installation and construction of the pipe. Additional compensation will not be made for the trucking, removal or disposal of the material.

D. Submit shop drawings and product information for all sanitary sewer materials to the Engineer prior to use on site.

E. The contractor shall work with the City to verify the whether all services are in use prior to reconnection, removal or leaving in place.

S-2.1 CONNECT TO EXISTING SANITARY SEWER

A. FOR PIPE CONNECTIONS
1. The existing sewer line shall be sawcut to create a clean edge at the connection point.
2. The transition coupling used for the connection shall consist of an elastomeric sleeve with incorporating stainless steel tension bands and tightening mechanisms, conforming to ASTM Cl 173.

B. FOR MANHOLE CONNECTIONS
1. The Contractor shall furnish and install a watertight rubber boot connection during the connection of the sanitary sewer pipe to the in-place manhole. If the size of the opening into the structure needs to be enlarged to allow for proper boot and pipe installation, the Contractor shall core drill a new hole into the manhole at the proper elevation and the work shall include the reconstruction of the invert of the structure to provide for smooth flow through the structure from all piping.
2. When the existing castings are removed from manholes and immediately following installation of new manholes, the Contractor shall install covers or other appropriate materials to effectively seal the top of the manhole, preventing material from entering the sewer from erosion or roadway construction operations. Steel plates may be used if they are of sufficient size to cover the entire manhole section (outside of the wall), the plates are not bent, and they are installed with a continuous ring of bitumastic material on top of the barrel section.
3. Castings shall be Neenah Rl 726A paid for as 2506.602 Casting Assembly Special.

S-2.2 PVC PIPE SEWER

A. Polyvinyl Chloride Pipe (Pressure): Smooth walled polyvinyl chloride pipe and fittings shall conform to the requirements of ASTM D-3034 and ASTM F-679 for the size, standard dimension ratio (SDR), and strength requirements indicated on the Plans, Specifications, and Special Provisions. Unless otherwise specified in the plans or specifications, all pipe and fittings shall be a minimum SDR 35. The grade used shall be resistant to aggressive soils or corrosive substances in accordance with the requirements of ASTM D-543.

1. General: Pipe and fittings shall be made of compounds conforming to ASTM D1784 in accordance with the material requirements of ASTM D3034.
2. Design: Integral bell gasketedjoint and a minimum wall thickness conforming to SDR 26 or 35 as shown on the Drawings.
3. Joints: Elastomeric gasket joints providing a water-tight seal conforming to ASTM D3212 or ASTM F477.
4. Marking: Conform to ASTM D3034.

S-2.3 SEWER SERVICES PIPES, CONNECTIONS AND APPURTENANCES

A. Sewer service pipe and pipe fittings shall be of the same class and grade as specified for the mainline pipe, unless otherwise specified in the special provisions.

B. The Plans indicated new sewer service locations based on the best information provided to the Engineer. Prior to installing sewer wyes and constructing sewer services, Contractor shall coordinate location of sewer services with Engineer and owner.

S-2.4 TRACER WIRE SYSTEM

A. Complete tracer wire systems in accordance with the details on the plan shall be installed for the, sanitary sewer system, and lot services installed on this project. Conductivity of the tracer wire system shall be confirmed prior to acceptance. Tracer wire system shall be considered incidental.

S-2.5 CLEAN & VIDEO TAPE PIPE SEWER

A. The Contractor shall televise all gravity sanitary sewer lines within 30 days after the completion of all new sewer insta llation. Prior to televising the Contractor shall clean the sewer to ensure it is free of debris material. The Contractor is to give the Engineer at least 48 hours' notice before televising the sanitary sewer lines. The Contractor shall provide the following items after televising the sanitary sewer lines to the City:
   1. DVD's or other electronic data (such as memory stick, portable hard drive, etc) of the entire sanitary sewer
   2. A complete log report detailing the following information:
      a. Date
      b. Operator and Company
      c. Tape Number
      d. Tape Start
      e. Beginning MH and ending MH (street locations)
      f. Pipe size and type
      g. Any other remarks or comments

B. The Contractor shall immediately notify the Engineer of any problems encountered with the new pipe during the televising process to ensure sufficient investigation is done. If the Contractor does not make notification to the Engineer, and additional investigation is necessary to determine the extent of a problem in the opinion of the Engineer, the Contractor will perform additional evaluation at no additional cost to Owner.

C. Two copies of the televising DVD(s) and two hard copies of the televising report shall be provided to the Owner within 7 calendar days of the completion of the televising work being completed.

D. The video must be color.

E. Defects along the pipe are to be identified, indexed, and stamped into the video on the screen for easier identification by the Engineer/Owner.

F. The video inspection shall include providing video of the entire feature (completing a 360 degree pan of each broken, separated, or otherwise damaged joint and/or crack encountered in pipes, completing a top-to-bottom pan of the entire inner circumference of manholes /catch basins/drop inlets, etc.)

S-3 (2504) WATERMAIN CONSTRUCTION

A. This work shall consist of furnishing, modifying and installing the City water system and fittings in accordance with the Plans; the most recent version of the Standard Specifications for Trench Excavation and Backfill and Watermain and Service Line Installation as prepared by the City Engineers Association of Minnesota (CEAM); except as modified and supplemented herein and within the following (2504) Special Provisions.

B. Only products which meet the new "Lead Free" requirements are allowed to be used for water system work on this project to comply with the Reduction of Lead in Drinking Water Act which took effect in January of 2014.

C. Submit product information for all water main materials to the Engineer prior to use on site.

S-3.1 REMOVE EXISTING WATERMAIN AND SERVICES

A. Where the existing main is in approximately the same location as the new main, the old piping shall be removed and disposed ofby the Contractor.

B. In areas that the existing watermain is within the proposed excavation, the contractor shall remove the existing watermain pipe. Where the existing watermain pipe is not accessible for removal due to the location of private utilities, the contractor shall plug the ends of the pipe and fill it by pressure grouting with a sand-cement slurry with a maximum 28-day compressive strength of 1000 psi and a minimum amount of water to assure satisfactory placement.
Any pipe to be abandoned shall be done so with the approval of the Engineer.

S-3.3 CONNECT TO EXISTING WATERMAIN

A. This work shall consist of connecting a proposed water main to an existing water main/water service. The work shall be performed to the satisfaction of the Engineer and shall include all labor and equipment necessary to make the connection to the existing watermain.

C. When it is necessary to connect to the existing water system or close existing portions of the water system due to construction operations, the Contractor shall discuss that phase of the project with the City Public Works Department five (5) working days in advance of the planned starting date to allow the orderly planning and coordination by the City of Lake City. See the temporary water service special provision for additional information.

D. Prior to connecting to existing watermains or services, the project inspector and city utility supervisor must be notified. Notification of the specific time of the water shutdown must be made to the City Water Department personnel two (2) business days in advance of the shutdown. Any residents who will be affected by the shutting off of water shall be given a minimum of 24-hour advance notice in writing as to when and for how long service will be interrupted. Temporary water shutoffs shall not exceed four hours (4HR) in duration, and shall only occur between the hours of 9:00 AM and 3:00 PM, Monday through Friday as approved by the Engineer. Any exceptions to this requirement must be approved in advance by the Engineer. The Contractor shall at all times coordinate his work with the City of Lake City Water Department.

S-3.4 WATERMAIN

A. Push-on-Joint, Ductile-Iron Pipe: AWWA C151, with push-on-joint bell and plan spigot end unless grooved or flanged ends are indicated.

B. Fittings: Fittings shall be Ductile Iron, having a minimum working pressure rating of 150 psi, and shall conform to the mechanical joint requirements of AWWA C153/ANSI 21.53. All fittings shall be coated with a 6-8 mil nominal thickness fusion bonded epoxy conforming to requirements of ANSI/A WWA and Cl 16/AZ l.1 6. All fittings shall be certified to be produced according to all applicable A WWA , ASTM and ANSI standards.

D. Restraints: "Alpha" wide range couplings shall be used for all connections to existing pipe and in place of sleeves, and on all joints on hydrant leads. Joint restraint in accordance with the most current version of the CEAM Specifications must be used on all other fittings, must be Mega-Lug , SIGMA PY-LOK, or PVC Star Grip 4000 or equal.

E. Bolts: Bolts for fittings shall be Core Blue or stainless steel. Stainless Steel Bolts shall conform to requirements of ASTM F593 and ASTM F594, Alloy Group 1, 2, or 3 and be approved for use as exterior bolts for hydrants and gate valves.

F. Watermain for this project shall be of the size and location as shown on the plans. Any required overdepth, whether shown on the plans or not, to provide the required minimum clearances from other existing or proposed buried utility lines will be considered to be incidental to watermain installation and no direct compensation will be made.

S-3.5 HYDRANT

A. This work shall consist of furnishings and installing hydrants after extending the leads, including appurtenant gate valves and housings, at a new location outside the roadbed as directed by the Engineer.

B. Hydrants shall be Waterous Pacer WB-67-250, except the break off section shall be a 16" barrel section in lieu of 10". The 2 ½" nozzle is national standard thread, the 5" nozzle is a special Lake City thread.

C. All materials furnished under this specification shall be new and like in kind to that in place.

D. Prior to its installation , the hydrant and gate valve shall be cleaned of all foreign matter and after installation shall be disinfected in accordance with the procedures described in paragraphs No.'s 1227 and 1228 of Section XII "Manual of Water Supply Sanitation" of the Minnesota Department of Health.

S-3.6 GATE VALVE AND BOX

A. GATE VALVE

1. Six inch to twelve-inch valves shall be resilient seated gate valves, larger than twelve inches shall be butterfly. Tapping tees shall have resilient seated gate valves. All valves shall be for buried service.
2. Gate valves shall conform to AWWA C509 or AWWA C515 for Resilient Seated Valves, and shall comply with the following supplementary requirements:
   a. Working pressure rating of 200 psi for all sizes.
   b. Two-inch square operating nut open to left
   c. Double "O" ring stem seal, one above and below the stem seal.
   d. Weather seal on bonnet cover.
   e. Non-rising stem.
   f. Mechanical joints.
   g. 304 Stainless Hardware.
   h. Ductile Iron body.
   i. Manufacturers: American Flow Control 2500 series, U.S. Pipe Metro Seal, Mueller 2360 or approved equal.

S-3.7 VALVEBOXES

A. Valve boxes shall be 5-1/4" diameter shaft suitable for 8.0' (or more) of cover over the top of the water main. Boxes shall be bonnet, cast iron screw type, three-piece boxes with the word "WATER" on the lid unless the valve is on a fire suppression service line in which case the word "FIRE" shall be on the lid. Valve boxes shall be Tyler 6850 with 5-1/4" drop lid, or equal.

B. Gate valves with alpha end connections installed on this project, including hydrant lead valves, shall include a "Gate Valve Adaptor" as manufactured by Adaptor, Inc. of West Allis, WI or equal.

S-3.8 WATER SERVICE PIPE, CONNECTIONS AND APPURTENANCES

A. Tapping sleeves for watermains shall be made of corrosion resistant materials (coated ductile iron, stainless steel, etc.)

B. The Contractor shall provide all materials and workmanship as needed to connect services to the mains.

A. SERVICE PIPE

1. Cross-linked Polyethylene (PEX) pipe as per ASTM F876, ASTM F877, and AWWA C904, NSF/ANSI Standard 61 for potable water distribution, as specified on the Proposal or in the Special Provisions. Water service piping supplied shall include markings indicating the type, pressure class, testing certification, and use for potable water systems. Polyethylene encasement material shall conform to the requirements of AWWA C-105 for tube type installation and 8 mil nominal film thickness.

S-3.9 DUCTILE IRON FITTINGS

A. All fittings on this project within the City of Lake City must be an approved megalug style retainer. Manufacturers shall be in accordance with the most current version of the CEAM.

B. The Contractor shall be required to restrain a minimum of20' from all fittings. Watermain Ductile Iron Fittings shall meet the following requirements:

C. ANSI/AWWA Cl 10/A21.10 and C153/A21.53-84 "American National Standard for Ductile Iron Compact Fittings, 3-inch through 24-inch, and 54-inch through 64-inch for Water Service,"

D. ANSI/AWWA C111/A21. 11 "American National Standard for Rubber Gasket Joints for Ductile Iron Pressure Pipe and Fittings,"

E. ANSI/AWWA C116/A21.16 "American National Standard for Protective Fusion Bonded Epoxy Coatings for the Interior and Exterior Surfaces of Ductile Iron and Gray Iron Fittings for Water Supply Service."

S-3.10 TRACER WIRE SYSTEM

A. Complete tracer wire systems in accordance with in the details on the plans shall be installed for the, watermain, and lot services installed on this project. Conductivity of the tracer wire system shall be confirmed prior to acceptance. Tracer wire system shall be considered incidental to utility installation.

S-3.11 TESTING AND DISINFECTION OF WATERMAIN

A. Watermain shall be pressure tested at 150 psi for at least two hours, with no pressure drop allowed for the duration of the test. The test shall be applied at the lowest practical elevation on the section to be tested. The Contractor will be responsible for all work incurred to meet the requirements and will coordinate their efforts with the Public Works Department - Utilities Division staff.

B. Flushing of the new watermains and bacteria testing shall be done in accordance with requirements of the Minnesota Department of Health and the AWWA Standard for Disinfecting Water Mains (AWWA C651-05). Two consecutive bacteria tests are required, 24 hours apart, with the first test taken no less than 16 hours after the flushing of the section of watermain being tested.

S-3.12 POLYSTYRENE INSULATION

A. This work shall consist of furnishing and installing 2”-inch-thick insulation board above the water main at the locations designated in the Plan. This work shall be performed in accordance with the details shown in the Plans, the applicable MnDOT Standard Specifications, and the following:

B. The insulation board shall be rigid expanded polystyrene conforming to the material requirements of MnDOT 3760. Styrofoam S.M. and Styrofoam TG brand insulation is an approved insulation material.

C. The insulation material shall be furnished in panels 1 inch thick and shall be placed on a smooth level foundation in a staggered manner that will provide joint overlaps a minimum of 6 inches on the underlying sheets and the edges shall be trim and square. A minimum of two wood skewers per board in each layer driven flush with the surface of the material shall be utilized to hold the insulation material in place during the backfill operations.

D. The placement of the backfill material over the insulation board and compaction thereof shall be accomplished in a manner that will preclude damage to the insulation material. Construction equipment of any kind shall not operate directly on the insulation board. Sections of insulation board damaged by the Contractor's construction operations shall be replaced at the Contractor's own expense.

Division .....Section Title ..... Pages

DIVISION 26 - ELECTRICAL

26 0001 .....ELECTRICAL CERTIFICATION 1
26 0010 .....GENERAL PROVISIONS 7

THIS PAGE LEFT BLANK INTENTIONALLY

SECTION 26 0001 – ELECTRICAL CERTIFICATION

1.1 ELECTRICAL ENGINEER'S CERTIFICATION

A. I hereby certify that Division 26 of this Specification was prepared by me or under my direct supervision and that I am a duly Licensed Professional Engineer under the laws of the State of Minnesota.

B. Name: Jay S. Hruby, PE

C. License Number: 40290

D. Signature:_____ Date: September 11, 2020

END OF SECTION 26 0001

THIS PAGE LEFT BLANK INTENTIONALLY

SECTION 26 0010

GENERAL PROVISIONS

1.1 GENERAL

A. The general conditions, special conditions and general requirements apply to all work under this division.

B. The work shall consist of the furnishing of all labor, materials, services, and equipment necessary for, and incidental to the electrical work called for on the drawings and specifications.

C. The work shall also include the completion of details of electrical work not mentioned or shown, which are necessary for the successful operation of the electrical systems described on the drawings and as required by the specifications.

D. The only electrical work not included shall be those items explicitly indicated to be excluded.

E. The Contractor shall assume full responsibility for additional costs which may result from unauthorized deviations from the contract documents.

F. The final installed electrical systems shall be complete and in all respects ready for use, tested as indicated and/or required with test reports, prior to the final site observation and/or the Owner's acceptance. The work of these documents shall consist of furnishing all labor, materials, services, and equipment necessary for and incidental to the electrical work called for on the drawings or specifications.

G. The Contractor is responsible for review of all drawings, including but not limited to architectural, mechanical, structural, civil and landscape for portions of their work to be included or coordinated. No extra credits will be allowed due to the Contractor’s failure to review and coordinate with all other disciplines.

H. Contractor shall visit the site and become familiar with on-site conditions before submitting their bid. Failure to visit the site will in no way relieve the contractor the necessity of performing work and any work required to complete the work intended by the drawings and specifications, which should be determined by the site visit.

I. The drawings and specifications are intended to supplement each other, such that information contained in either shall be executed in the same manner.

J. The drawings are in general diagrammatic and not intended to show exact locations. The drawings are not intended to be scaled for rough-in dimensions or exact locations. Architectural, mechanical, structural, fixture, landscape drawings, etc. shall be consulted for exact locations if required. Only critical dimensions will be provided.

K. Branch circuit wiring may not be shown on the drawings, but are designated by the indication of panel and circuit numbers, respectively. Panel designations may also be indicated by general plan notes on each drawing. Panel and circuit designations are shown adjacent to a device for lighting and receptacles. Motor branch circuiting is indicated on the motor and equipment schedule, while other circuiting requirements shall be as indicated in notes, schedules, etc.

L. Locations and routing of all conduits, wiring, cables, homeruns, etc. shall be verified and coordinated by the Electrical Contractor prior to installation. If conflicts arise, or it is not clear as to the exact intent, the Contractor shall notify the Engineer for clarification. The complete installation shall be done in a neat and orderly fashion.

1.2 WORK INCLUDED

A. This project shall consist of furnishing all labor, materials, services, and equipment necessary for and incidental to the completion of the hereinafter described electrical work as required by the Plans and Specifications.

1.3 SPECIAL CHARGES

A. All fees, permits, and licenses required for the electrical work are to be included in the contract.

1.4 CODES, FEES AND PERMITS

A. The complete electrical installation shall conform to all of the requirements and recommendations of the following codes and standards.

1. National Electrical Code (NFPA 70-2011)
2. State and Local Electrical Codes - Amendments
3. Minnesota State Building Code – Chapter 7511 – Minnesota State Fire Code
4. National Fire Alarm and Signal Code (NFPA 72-2007)
5. National Life Safety Code (NFPA 101)
6. National Board of Fire Underwriters
7. National Electrical Manufacturer's Association (NEMA)
8. Underwriter's Laboratories (UL)
9. National Electrical Contractor Association (NECA) - Standard of Installation
10. American Institute of Architects (AIA) – Guidelines
11. Americans with Disability Act (ADA) - Guidelines
12. Minnesota Energy Code - ASHREA 90.1-2004

B. All fees, permits, licenses, etc., necessary to complete the electrical work shall be paid by the Contractor.

1.5 DRAWINGS AND SPECIFICATIONS

A. These documents are intended to supplement each other such that information contained in either shall be executed in like manner. The drawings are in general diagrammatic and not intended to show exact locations. Contractor shall coordinate installation with other documents and on-site conditions.

B. If a question exists regarding the exact intention of the documents, instructions shall be obtained from the architect/engineer before proceeding. If instructions cannot be obtained due to time or communication limitations, the greater quantity, superior quality, or condition most favorable to the owner shall be assumed.

C. Contractors shall be responsible to review all drawings, including, but not limited to architectural, mechanical, structural, civil and landscaping for portions of their work to be

included in this contractor's scope of work. No extras or credits will be allowed due to a contractor's failure to review and coordinate with all other disciplines.

1.6 WORKMANSHIP

A. All work shall be performed in a neat manner by experienced and skilled professionals in the electrical trade; only quality work will be accepted.

1.7 MATERIALS AND EQUIPMENT

A. All materials and equipment shall be as specified and indicated by the Plans. Items specified with the option of equals may be substituted for at the Contractor's option. However, Contractor may be required to verify equal status and final approval is by the engineer.

1.8 COORDINATION

A. Contractor shall be responsible for total site layout and coordination of the electrical work with other trades and site conditions. Minor revisions may be required to meet these requirements, however, shall not be implemented without approval. Work schedules shall be dictated by that of other trades and the project schedule. Cutting, patching, etc., as required for the completion of the electrical work shall be the responsibility of this Contractor.

1.9 IDENTIFICATION

A. Distribution equipment, control equipment, pull boxes, and all equipment for future use shall be labeled with embossed adhesive-backed, black and white name plates with 3/8" high letters. Do not abbreviate, use terminology that can be easily understood by the owner. All panels shall be provided with typed circuit directories using easily understood terminology.

B. Provide self-adhesive label on all line voltage junction boxes and device cover plates, which identifies the panel and circuit breaker number of the circuits located within the box.

C. Provide self-adhesive label on all low voltage junction boxes and device cover plates, which identifies data room and jack identification number.

1.10 SHOP DRAWINGS

A. Manufacturer's approval drawings shall be submitted prior to purchase for the following items:

1. Pedestals

B. Six sets of shop drawings shall be submitted to the engineer for approval.

1.11 DESIGN BUILD CONTRACT

A. The contract for electrical construction shall be based on a design build concept. The information contained within these drawings and specifications establish the minimum level of quality and quantity for the project. The contractor shall be responsible for verification of all

details, verification of site conditions, and completion of the design and shall assume responsibility for said design.

B. Contractor shall submit design drawings and equipment shop drawings demonstrating compliance with these requirements. The drawings shall be detailed and self-explanatory.

1.12 SPECIAL INSTRUCTIONS TO THE CONTRACTOR

A. Branch circuit wiring is not shown on the drawings, but is designated by the indication of panel and circuit numbers (respectively). Panel and circuit numbers are shown adjacent to each device for lighting and receptacles (panel may also be designated by the general plan notes). Motor branch circuiting is indicated on the motor and equipment schedule while other circuiting requirements shall be as indicated in the notes, schedules, etc.

B. All branch circuits shall be 20 amp utilizing 20 amp conductors, unless indicated otherwise, or as required by an obvious requirement such as designations for special purpose receptacles or similar.

C. Locations and routing of all conduits, wiring, cables, homeruns, etc. shall be determined by the Electrical Contractor, and shall be done in a neat and orderly fashion.

D. Feeders are sized based on ampacities only. The Electrical Contractor shall provide the appropriate conduit and wire size based on their choice of conductors.

1.13 RECORD DRAWINGS

A. Contractor shall provide record drawings reflecting all additions and/or modifications to the systems shown and required for the indicated area of the facility. These shall be submitted to the engineer for approval upon completion of the project. Reproducible copies of the base contract documents shall be provided to the contractor upon request for this purpose.

1.14 GUARANTEE

A. All work shall be unconditionally guaranteed for a period of one year from final payment to be free from any defects due to faulty workmanship or materials. Contractor shall replace, repair, or alter at their expense, any items brought to his attention during this period.

1.15 ELECTRICAL DEMOLITION

A. Electrical Contractor shall perform all demolition of the existing electrical installation in remodeled areas as required to complete construction revisions as indicated on the drawings. Coordinate with the Other Contractors in areas where other trades are affected.

B. All existing materials and equipment indicated by Owner to be salvaged and which are not scheduled to be reused or relocated, shall be carefully removed and handled with care to minimize damage, and shall be delivered to the Owner and stored where directed on the site.

C. All existing materials and equipment indicated to be reused or relocated shall be carefully removed and handled with care to minimize damage, and stored on the site. This existing equipment shall be thoroughly cleaned prior to reinstating.

D. All other existing materials or debris resulting from demolition operations shall become the property of the Contractor and removed from the site.

E. Where a telephone or cable circuit needs to be demolished Contractor shall coordinate with Owner to have these connections disconnected.

F. Where conditions other than those previously stated occur, this Contractor shall consult with the Engineer prior to performing any work to insure that method of correction will be satisfactory.

1.16 TEMPORARY LIGHTING AND POWER

A. Utilize existing service to provide a temporary electrical service and power and lighting distribution system for the building portion of the project.

B. A temporary miscellaneous power system shall be provided which shall consist of 20 amp, 120 volt duplex receptacles located throughout the facility. Receptacles shall be located to allow use of 50' extension cords to reach all areas.

1.17 RACEWAYS

A. All conductors shall be enclosed in a concealed raceway system. Raceways shall be rigid metal, electrical metallic tubing, flexible metal, intermediate metal or rigid PVC as manufactured by Republic, Youngstown, Triangle, Gedney, Carlon, Electroflex, or equal. Conduit fittings shall be of construction similar to the particular raceway. Weather-tight as required. Fittings must be set screw or compression type. Indentor type are not acceptable. In addition to conduit manufacturers, fittings shall be as manufactured by Raco, Gedney, Efcor, Regal, or equal. Conduit installation shall conform to the following requirements:

1. Minimum size 1/2" except 3/4" for homeruns.
2. Neat and orderly perpendicular or parallel with building construction.
3. Support with non-corrosive metallic straps, clamps or hangers.
4. Coordinate routing with other trades. Conduit location is secondary to mechanical and general construction elements of building.
5. Conceal unless explicitly noted otherwise.
6. Conduits penetrating walls, etc., shall be sealed to maintain the integrity of the assembly.

1.18 SURFACE RACEWAYS

A. All exposed surface wiring shall utilize a surface raceway system as manufactured by Wiremold. System shall conform to the following requirements:

1. Components color shall be as determined by Architect.
2. Minimum size as shown on the drawings.
3. All fitting shall be factory formed and finished.
4. All boxes shall be square cornered except round for fixtures.
5. Raceway chassis may not be used for a ground. Provide ground wires.

1.19 CONDUCTORS

A. Conductors shall be drawn copper.

B. Conductors shall conform to the following requirements:

1. #12 minimum size (or as required to accommodate voltage drop).
2. Solid for #12 and #10.
3. Stranded for #6 and larger.
4. Color coded. Colored wire for branch circuits and field marked for feeders.
5. Feeder splices shall utilize hydraulic compression connectors.
6. Branch splices shall utilize "Scotchlock" connectors.
7. Aluminum conductors shall not be used with box lugs. Use copper pigtail or solid stud crimped to end of conductor with hydraulic compression tool.
8. Minimum conductor insulation shall be type TW for size #8 and smaller and type THW for size #6 and larger. Change as required for high ambient temperatures.
9. NM, NMC and UF cable assemblies may be utilized where allowed by code.

1.20 JUNCTION AND OUTLET BOXES

A. Boxes shall be of galvanized code gauge steel as manufactured by Appleton, Steel City, Raco or equal. Boxes shall comply with the following requirements:

1. Minimum size 4" square or octagon by 1 1/2" deep.
2. Plaster or extension rings as required.
3. Masonry type where required.
4. Pull and junction boxes sized per code.
5. Supported independent of conduit system.
6. Offset back-to-back boxes a minimum of 6".
7. Type FS for surface exterior applications.

1.21 WIRING DEVICES

A. Devices shall be specification grade as manufactured by Sierra, Slater, Leviton, Hubbell, Bryant and Arrow-Hart. Devices shall comply with the following requirements:

1. Factory standard color as selected by the Architect with stainless steel plates. Round corner galvanized plates for surface installation.
2. All devices shall be listed as Specification Grade or better.
3. Toggle type switches with 20 amp, 120-277 volt rating.
4. Duplex receptacles with 20 amp, 120 volt rating and three-wire grounding type with screw type retention. Push in style devices, are not acceptable.
5. Pilot-switch combinations with neon pilot located in toggle.
6. Wet location covers for weatherproof devices.
7. Clock hangers with 15 amp, 125 volt rating and hanger clip.
8. Ground Fault Circuit Interrupter (GFCI) receptacles with 20 amp, 125 volt, and 5 MA trip rating. Feed thru type protection devices are not acceptable.
9. Dimmer switches shall be digital type as described under lighting controls.
10. Mount switches at 42" unless noted otherwise.
11. Mount receptacles at 20" unless noted otherwise.
12. Tamper resistant receptacles equal to Leviton #5262-SG shall be used in all areas utilized for child care.

1.22 FIRE-STOPPING

A. Apply firestopping to cable and raceway penetrations of fire-rated floor and wall assemblies / penetrations to achieve fire-resistance, smoke and water rating of the assembly. Apply sealing at all penetrations to walls, floors, ceiling, raceways and ducts.

B. Firestopping shall be manufactured by 3M or Hilti. 3M product numbers are used herein.

C. All fire barrier sealing shall be installed in accordance with manufacturer recommendations and methods.

D. Do not install the fire sealing until all cabling has been completed.

E. All cracks, voids, or holes (up to 4”) in diameter of fire rated doors, walls, or ceilings shall be sealed using 3M fire barrier calk No. CP-25, putty No. 303, wrap strip FS195 or composite sheet CS195. All larger penetrations shall be fitted with 3M brand fire barrier penetration sealing systems No. 7902-R, 7902, 7904, and 7904-R.

1.23 ELECTRICAL SERVICE

A. Electrical characteristics shall be as indicated by Plans. Contractor shall coordinate all service work with the power company.

B. Division of service work shall be as indicated by the service riser diagram and as required by the power company.

C. Service entrance equipment including panels, transformers, feeder conduits, and switchboards shall all be bonded together and connected to the system ground.

D. Provide service entrance rated pedestals with AIC rating as specified on the drawings.

1.24 GROUNDING

A. All grounding requirements shall comply with the NFPA 70 (N.E.C) and requirements of the utility company providing service to the building.

B. Grounding and bonding for communications systems shall in addition to N. E. C requirements shall adhere to J-STD-607-A (Commercial Building Grounding and Bonding Requirements for Telecommunications).

END OF SECTION

SECTION 311000 - SITE CLEARING

PART 1 - GENERAL

1.1 RELATED DOCUMENTS

A. Drawings and general provisions of the Contract, including General and Supplementary Conditions and Division 01 Specification Sections, apply to this Section.

1.2 SUMMARY

A. Section Includes:

1. Protecting existing vegetation to remain.
2. Removing existing vegetation.
3. Clearing and grubbing.
4. Stripping and stockpiling topsoil.
5. Removing above- and below-grade site improvements.
6. Disconnecting, capping or sealing, and removing site utilities.
7. Temporary erosion- and sedimentation-control measures.

1.3 DEFINITIONS

A. Subsoil: All soil beneath the topsoil layer of the soil profile, and typified by the lack of organic matter and soil organisms.

B. Surface Soil: Soil that is present at the top layer of the existing soil profile at the Project site. In undisturbed areas, the surface soil is typically topsoil; but in disturbed areas such as urban environments, the surface soil can be subsoil.

C. Topsoil: Top layer of the soil profile consisting of existing native surface topsoil or existing in-place surface soil and is the zone where plant roots grow.

D. Plant-Protection Zone: Area surrounding individual trees, groups of trees, shrubs, or other vegetation to be protected during construction, and indicated on Drawings.

E. Tree-Protection Zone: Area surrounding individual trees or groups of trees to be protected during construction, and defined by a circle concentric with each tree with a radius 1.5 times the diameter of the drip line unless otherwise indicated.

F. Vegetation: Trees, shrubs, groundcovers, grass, and other plants.

1.4 MATERIAL OWNERSHIP

A. Except for stripped topsoil and other materials indicated to be stockpiled or otherwise remain Owner's property, cleared materials shall become Contractor's property and shall be removed from Project site.

1.5 INFORMATIONAL SUBMITTALS

A. Existing Conditions: Documentation of existing trees and plantings, adjoining construction, and site improvements that establishes preconstruction conditions that might be misconstrued as damage caused by site clearing.

1. Include plans and notations to indicate specific wounds and damage conditions of each tree or other plants designated to remain.

B. Record Drawings: Identifying and accurately showing locations of capped utilities and other subsurface structural, electrical, and mechanical conditions.

1.6 PROJECT CONDITIONS

A. Traffic: Minimize interference with adjoining roads, streets, walks, and other adjacent occupied or used facilities during site-clearing operations.

1. Do not close or obstruct streets, walks, or other adjacent occupied or used facilities without permission from Owner and authorities having jurisdiction.
2. Provide alternate routes around closed or obstructed traffic ways if required by Owner or authorities having jurisdiction.

B. Improvements on Adjoining Property: Authority for performing site clearing indicated on property adjoining Owner's property will be obtained by Owner before award of Contract.

1. Do not proceed with work on adjoining property until directed by Architect.

C. Utility Locator Service: Notify utility locator service for area where Project is located before site clearing.

D. Do not commence site clearing operations until temporary erosion- and sedimentation-control and plant-protection measures are in place.

E. The following practices are prohibited within protection zones:

1. Storage of construction materials, debris, or excavated material.
2. Parking vehicles or equipment.
3. Foot traffic.
4. Erection of sheds or structures.
5. Impoundment of water.
6. Excavation or other digging unless otherwise indicated.
7. Attachment of signs to or wrapping materials around trees or plants unless otherwise indicated.

F. Do not direct vehicle or equipment exhaust towards protection zones.

G. Prohibit heat sources, flames, ignition sources, and smoking within or near protection zones.

H. Soil Stripping, Handling, and Stockpiling: Perform only when the topsoil is dry or slightly moist.

PART 2 - PRODUCTS

2.1 MATERIALS

A. Satisfactory Soil Material: Requirements for satisfactory soil material are specified in Section 312000 "Earth Moving."

1. Obtain approved borrow soil material off-site when satisfactory soil material is not available on-site.

B. Antirust Coating: Fast-curing, lead- and chromate-free, self-curing, universal modified-alkyd primer complying with MPI #79, Alkyd Anticorrosive Metal Primer or SSPC-Paint 20 or SSPC-Paint 29 zinc-rich coating.

1. Use coating with a VOC content of 420 g/L (3.5 lb/gal). or less when calculated according to 40 CFR 59, Subpart D (EPA Method 24).

PART 3 - EXECUTION

3.1 PREPARATION

A. Protect and maintain benchmarks and survey control points from disturbance during construction.

B. Locate and clearly identify trees, shrubs, and other vegetation to remain. Flag each tree trunk at 54 inches (1372 mm) above the ground.

C. Protect existing site improvements to remain from damage during construction.

1. Restore damaged improvements to their original condition, as acceptable to Owner.

3.2 TEMPORARY EROSION AND SEDIMENTATION CONTROL

A. Provide temporary erosion- and sedimentation-control measures to prevent soil erosion and discharge of soil-bearing water runoff or airborne dust to adjacent properties and walkways, according to erosion and sedimentation control Drawings and requirements of authorities having jurisdiction.

B. Verify that flows of water redirected from construction areas or generated by construction activity do not enter or cross protection zones.

C. Inspect, maintain, and repair erosion- and sedimentation-control measures during construction until permanent vegetation has been established.

D. Remove erosion and sedimentation controls after site has been stabilized and restore and stabilize areas disturbed during removal.

3.3 TREE AND PLANT PROTECTION

A. Repair or replace trees, shrubs, and other vegetation indicated to remain or be relocated that are damaged by construction operations, in a manner approved by Architect.

3.4 EXISTING UTILITIES

A. Locate, identify, disconnect, and seal or cap utilities indicated to be removed.

1. Arrange with utility companies to shut off indicated utilities.

B. Locate, identify, and disconnect utilities indicated to be abandoned in place.

C. Interrupting Existing Utilities: Do not interrupt utilities serving facilities occupied by Owner or others unless permitted under the following conditions and then only after arranging to provide temporary utility services according to requirements indicated:

1. Notify Owner not less than two days in advance of proposed utility interruptions.
2. Do not proceed with utility interruptions without Owner's written permission.

D. Excavate for and remove underground utilities indicated to be removed.

3.5 CLEARING AND GRUBBING

A. Remove obstructions, trees, shrubs, and other vegetation to permit installation of new construction.

1. Do not remove trees, shrubs, and other vegetation indicated to remain or to be relocated.
2. Grind down stumps and remove roots, obstructions, and debris to a depth of 18 inches (450 mm) below exposed subgrade.
3. Use only hand methods for grubbing within protection zones.
4. Chip removed tree branches and dispose of off-site.

B. Fill depressions caused by clearing and grubbing operations with satisfactory soil material unless further excavation or earthwork is indicated.

1. Place fill material in horizontal layers not exceeding a loose depth of 8 inches (200 mm) and compact each layer to a density equal to adjacent original ground.

3.6 TOPSOIL STRIPPING

A. Remove sod and grass before stripping topsoil.

B. Strip topsoil in a manner to prevent intermingling with underlying subsoil or other waste materials.

1. Remove subsoil and nonsoil materials from topsoil, including clay lumps, gravel, and other objects more than 2 inches (50 mm) in diameter; trash, debris, weeds, roots, and other waste materials.

C. Stockpile topsoil away from edge of excavations without intermixing with subsoil. Grade and shape stockpiles to drain surface water. Cover to prevent windblown dust and erosion by water.

1. Limit height of topsoil stockpiles to 72 inches (1800 mm).
2. Do not stockpile topsoil within protection zones.
3. Dispose of surplus topsoil. Surplus topsoil is that which exceeds quantity indicated to be stockpiled or reused.

3.7 SITE IMPROVEMENTS

A. Remove existing above- and below-grade improvements as indicated and necessary to facilitate new construction.

B. Remove slabs, paving, curbs, gutters, and aggregate base as indicated.

1. Unless existing full-depth joints coincide with line of demolition, neatly saw-cut along line of existing pavement to remain before removing adjacent existing pavement. Saw-cut faces vertically.
2. Paint cut ends of steel reinforcement in concrete to remain with two coats of antirust coating, following coating manufacturer's written instructions. Keep paint off surfaces that will remain exposed.

3.8 DISPOSAL OF SURPLUS AND WASTE MATERIALS

A. Remove surplus soil material, unsuitable topsoil, obstructions, demolished materials, and waste materials including trash and debris, and legally dispose of them off Owner's property.

B. Separate recyclable materials produced during site clearing from other nonrecyclable materials. Store or stockpile without intermixing with other materials and transport them to recycling facilities. Do not interfere with other Project work.

END OF SECTION 311000

SECTION 312000 - EARTH MOVING

PART 1 - GENERAL

1.1 RELATED DOCUMENTS

A. Drawings and general provisions of the Contract, including General and Supplementary Conditions and Division 01 Specification Sections, apply to this Section.

1.2 SUMMARY

A. Section Includes:

1. Preparing subgrades for slabs-on-grade, walks, pavements, turf and grasses and plants.
2. Excavating and backfilling for buildings and structures.
3. Drainage course for concrete slabs-on-grade.
4. Base course for concrete, walks and pavements.
5. Base course and subbase course for asphalt paving.
6. Subsurface drainage backfill for walls and trenches.
7. Excavating and backfilling trenches for utilities and pits for buried utility structures.

1.3 DEFINITIONS

A. Backfill: Soil material or controlled low-strength material used to fill an excavation.

1. Initial Backfill: Backfill placed beside and over pipe in a trench, including haunches to support sides of pipe.
2. Final Backfill: Backfill placed over initial backfill to fill a trench.

B. Base Course: Aggregate layer placed between the subgrade course and hot-mix asphalt paving/concrete pavement/concrete sidewalk.

C. Bedding Course: Aggregate layer placed over the excavated subgrade in a trench before laying pipe.

D. Borrow Soil: Satisfactory soil imported from off-site for use as fill or backfill.

E. Drainage Course: Aggregate layer that minimizes upward capillary flow of pore water.

F. Excavation: Removal of material encountered above subgrade elevations and to lines and dimensions indicated.
1. Authorized Additional Excavation: Excavation below subgrade elevations or beyond indicated lines and dimensions as directed by Architect. Authorized additional excavation and replacement material will be paid for according to Contract provisions for changes in the Work.
2. Bulk Excavation: Excavation more than 10 feet (3 m) in width and more than 30 feet (9 m) in length.
3. Unauthorized Excavation: Excavation below subgrade elevations or beyond indicated lines and dimensions without direction by Architect. Unauthorized excavation, as well as remedial work directed by Architect, shall be without additional compensation.

G. Fill: Soil materials used to raise existing grades.

H. Structures: Buildings, footings, foundations, retaining walls, slabs, tanks, curbs, mechanical and electrical appurtenances, or other man-made stationary features constructed above or below the ground surface.

I. Subgrade: Uppermost surface of an excavation or the top surface of a fill or backfill immediately below base, drainage fill, drainage course, or topsoil materials.

J. Planting Soil: Imported soil used for perennial beds, ground covers and as indicated on Drawings.

K. Utilities: On-site underground pipes, conduits, ducts, and cables, as well as underground services within buildings.

L. Select Granular: Select material for fill or backfill under building foundations, building slab on grade, exterior pavements, and miscellaneous structures.

M. Topsoil: Existing top layer of soil or imported top layer of soil consisting of organic material and providing medium for plant root growth.

N. Testing Agency: Independent geotechnical or material testing laboratory approved by the architect to provide inspection testing and reporting services.
   1. At a minimum, the testing agency shall perform in place moisture density tests, on-site material tests, and laboratory testing of materials to be brought from off-site sources.

1.4 INFORMATIONAL SUBMITTALS

A. Qualification Data: For qualified testing agency.

B. Material Test Reports: For each on-site and borrow soil material proposed for fill and backfill as follows:

   1. Classification according to ASTM D 2487.
   2. Laboratory compaction curve according to ASTM D 698.

1.5 QUALITY ASSURANCE

A. Geotechnical Testing Agency Qualifications: Qualified according to ASTM E 329 and ASTM D 3740 for testing indicated.

B. Pre-excavation Conference: Conduct conference at Project site.

1.6 PROJECT CONDITIONS

A. Traffic: Minimize interference with adjoining roads, streets, walks, and other adjacent occupied or used facilities during earth moving operations.

   1. Do not close or obstruct streets, walks, or other adjacent occupied or used facilities without permission from Owner and authorities having jurisdiction.
   2. Provide alternate routes around closed or obstructed traffic ways if required by Owner or authorities having jurisdiction.

B. Improvements on Adjoining Property: Authority for performing earth moving indicated on property adjoining Owner's property will be obtained by Owner before award of Contract.

1. Do not proceed with work on adjoining property until directed by Architect.

C. Utility Locator Service: Notify utility locator service for area where Project is located before beginning earth moving operations.

D. Do not commence earth moving operations until temporary erosion- and sedimentation-control measures, specified in Section 311000 "Site Clearing," are in place.

E. Do not commence earth moving operations until plant-protection measures are in place.

F. The following practices are prohibited within protection zones:

1. Storage of construction materials, debris, or excavated material.
2. Parking vehicles or equipment.
3. Foot traffic.
4. Erection of sheds or structures.
5. Impoundment of water.
6. Excavation or other digging unless otherwise indicated.
7. Attachment of signs to or wrapping materials around trees or plants unless otherwise indicated.

G. Do not direct vehicle or equipment exhaust towards protection zones.

H. Prohibit heat sources, flames, ignition sources, and smoking within or near protection zones.

PART 2 - PRODUCTS

2.1 SOIL MATERIALS

A. General: Provide borrow soil materials when sufficient satisfactory soil materials are not available from excavations.

B. Satisfactory Soils: Soil Classification Groups GW, GP, GM, SW, SP, SM, CL and ML according to ASTM D 2487, or a combination of these groups; free of rock or gravel larger than 3 inches (75 mm) in any dimension, debris, waste, frozen materials, vegetation, and other deleterious matter.

C. Unsatisfactory Soils: Soil Classification Groups GC, SC, OL, CH, MH, OH, and PT according to ASTM D 2487, or a combination of these groups.

1. Unsatisfactory soils also include Soil Classification Groups CL and ML not maintained within 2 percent of optimum moisture content at time of compaction beneath exterior slabs and pavements and 3 percent optimum moisture in green area utility trenches.

D. Base Course: Naturally or artificially graded mixture of natural or crushed gravel, crushed stone, and natural or crushed sand; MnDOT Class 5; with at least 95 percent passing a 3/4-inch (19.0-mm) sieve and not more than 10 percent passing a No. 200 (0.075-mm) sieve.

E. Select Granular: Naturally or artificially graded mixture of natural or crushed gravel, crushed stone, and natural or crushed sand; MnDOT 3149; free of organic material with less than 40 percent passing a No. 40 sieve and not more than 8 percent passing a No. 200 sieve.

F. Bedding Course: Naturally or artificially graded mixture of natural or crushed gravel, crushed stone, and natural or crushed sand; ASTM D 2940; except with 100 percent passing a 1-inch (25-mm) sieve and not more than 8 percent passing a No. 200 (0.075-mm) sieve.

G. Gas Permeable Course (Radon Mitigation): AASHTO M43 No. 67 Stone.

H. Sand: ASTM C 33; fine aggregate.

I. Drainage Fill: AASHTO M43 #57 Stone.

2.2 ACCESSORIES

A. Warning Tape: Acid- and alkali-resistant, polyethylene film warning tape manufactured for marking and identifying underground utilities, 6 inches (150 mm) wide and 4 mils (0.1 mm) thick, continuously inscribed with a description of the utility; colored as follows:

1. Red: Electric.
2. Orange: Telephone and other communications.
3. Green: Sewer systems.

B. Detectable Warning Tape: Acid- and alkali-resistant, polyethylene film warning tape manufactured for marking and identifying underground utilities, a minimum of 6 inches (150 mm) wide and 4 mils (0.1 mm) thick, continuously inscribed with a description of the utility, with metallic core encased in a protective jacket for corrosion protection, detectable by metal detector when tape is buried up to 30 inches (750 mm) deep; colored as follows:

1. Yellow: Gas, oil, steam, and dangerous materials.
2. Blue: Water systems.

PART 3 - EXECUTION

3.1 PREPARATION

A. Protect structures, utilities, sidewalks, pavements, and other facilities from damage caused by settlement, lateral movement, undermining, washout, and other hazards created by earth moving operations.

B. Protect and maintain erosion and sedimentation controls during earth moving operations.

C. Protect subgrades and foundation soils from freezing temperatures and frost. Remove temporary protection before placing subsequent materials.

3.2 DEWATERING

A. Prevent surface water and ground water from entering excavations, from ponding on prepared subgrades, and from flooding Project site and surrounding area.

B. Protect subgrades from softening, undermining, washout, and damage by rain or water accumulation.

1. Reroute surface water runoff away from excavated areas. Do not allow water to accumulate in excavations. Do not use excavated trenches as temporary drainage ditches.

3.3 EXPLOSIVES

A. Explosives: Do not use explosives.

3.4 EXCAVATION, GENERAL

A. Unclassified Excavation: Excavate to subgrade elevations regardless of the character of surface and subsurface conditions encountered. Unclassified excavated materials may include rock, soil materials, and obstructions. No changes in the Contract Sum or the Contract Time will be authorized for rock excavation or removal of obstructions.

1. If excavated materials intended for fill and backfill include unsatisfactory soil materials and rock, replace with satisfactory soil materials.

3.5 EXCAVATION FOR STRUCTURES

A. Excavate to indicated elevations and dimensions within a tolerance of plus or minus 1 inch (25 mm). If applicable, extend excavations a sufficient distance from structures for placing and removing concrete formwork, for installing services and other construction, and for inspections.

1. Excavations for Footings and Foundations: Do not disturb bottom of excavation. Excavate by hand to final grade just before placing concrete reinforcement. Trim bottoms to required lines and grades to leave solid base to receive other work.
   a) Remove all organic material and fill material from beneath footings and foundations within 1:1 zone of influence down to natural soils as recommended in geotechnical report recommendations. Replace with select granular material within the building area.
   b) Provide minimum 12 inches select granular below footings if natural clay is present.
   c) Provide minimum 6 inches clean sand under 6 inches gas permeable aggregate below floor slab.
2. Excavation for Underground Tanks, Basins, and Mechanical or Electrical Utility Structures: Excavate to elevations and dimensions indicated within a tolerance of plus or minus 1 inch (25 mm). Do not disturb bottom of excavations intended as bearing surfaces.

B. Excavations at Edges of Tree- and Plant-Protection Zones:

1. Excavate by hand to indicated lines, cross sections, elevations, and subgrades. Use narrow-tine spading forks to comb soil and expose roots. Do not break, tear, or chop exposed roots. Do not use mechanical equipment that rips, tears, or pulls roots.

3.6 EXCAVATION FOR WALKS AND PAVEMENTS

A. Excavate surfaces under walks and pavements to indicated lines, cross sections, elevations, and subgrades.

3.7 EXCAVATION FOR UTILITY TRENCHES

A. Excavate trenches to indicated gradients, lines, depths, and elevations.

1. Beyond building perimeter, excavate trenches to allow installation of top of pipe below frost line.

B. Excavate trenches to uniform widths to provide the following clearance on each side of pipe or conduit. Excavate trench walls vertically from trench bottom to 12 inches (300 mm) higher than top of pipe or conduit unless otherwise indicated.

1. Clearance: As indicated.

C. Trenches in Tree- and Plant-Protection Zones:

1. Hand-excavate to indicated lines, cross sections, elevations, and subgrades. Use narrow-tine spading forks to comb soil and expose roots. Do not break, tear, or chop exposed roots. Do not use mechanical equipment that rips, tears, or pulls roots.
2. Do not cut main lateral roots or taproots; cut only smaller roots that interfere with installation of utilities.

3.8 SUBGRADE INSPECTION

A. Notify testing agency when excavations have reached required subgrade.

B. If testing agency determines that unsatisfactory soil is present, continue excavation and replace with compacted backfill or fill material as directed.

C. Proof-roll subgrade below the building slabs and pavements with a pneumatic-tired and loaded 10-wheel, tandem-axle dump truck weighing not less than 15 tons (13.6 tonnes) to identify soft pockets and areas of excess yielding. Do not proof-roll wet or saturated subgrades.

1. Completely proof-roll subgrade in one direction, repeating proof-rolling in direction perpendicular to first direction. Limit vehicle speed to 3 mph (5 km/h).
2. Excavate soft spots, unsatisfactory soils, and areas of excessive pumping or rutting, as determined by testing agency, and replace with compacted backfill or fill as directed.

D. Authorized additional excavation and replacement material will be paid for according to Contract provisions for changes in the Work.

E. Reconstruct subgrades damaged by freezing temperatures, frost, rain, accumulated water, or construction activities, as directed by testing agency, without additional compensation.

3.9 UNAUTHORIZED EXCAVATION

A. Fill unauthorized excavation under foundations or wall footings by extending bottom elevation of concrete foundation or footing to excavation bottom, without altering top elevation. Lean concrete fill, with 28-day compressive strength of 2500 psi (17.2 MPa), may be used when approved by Architect.

1. Fill unauthorized excavations under other construction, pipe, or conduit as directed by Architect.

3.10 STORAGE OF SOIL MATERIALS

A. Stockpile borrow soil materials and excavated satisfactory soil materials without intermixing. Place, grade, and shape stockpiles to drain surface water. Cover to prevent windblown dust.

1. Stockpile soil materials away from edge of excavations. Do not store within drip line of remaining trees.

B. Remove unsatisfactory soil material and dispose of legally from the site.

3.11 BACKFILL

A. Place and compact backfill in excavations promptly, but not before completing the following:

1. Construction below finish grade including, where applicable, subdrainage, dampproofing, waterproofing, and perimeter insulation.
2. Testing and inspecting underground utilities.
3. Removing concrete formwork.
4. Removing trash and debris.
5. Removing temporary shoring and bracing, and sheeting.
6. Installing permanent or temporary horizontal bracing on horizontally supported walls.

B. Place backfill on subgrades free of mud, frost, snow, or ice.

3.12 UTILITY TRENCH BACKFILL

A. Place backfill on subgrades free of mud, frost, snow, or ice.

B. Place and compact bedding course on trench bottoms and where indicated. Shape bedding course to provide continuous support for bells, joints, and barrels of pipes and for joints, fittings, and bodies of conduits.

C. Trenches under Footings: Backfill trenches excavated under footings and within 18 inches (450 mm) of bottom of footings with satisfactory soil; fill with concrete to elevation of bottom of footings. Concrete is specified in Section 033000 "Cast-in-Place Concrete".

D. Backfill voids with satisfactory soil while removing shoring and bracing.

E. Place and compact initial backfill of bedding course, free of particles larger than 1 inch (25 mm) in any dimension, to a height of 12 inches (300 mm) over the pipe or conduit.

1. Carefully compact initial backfill under pipe haunches and compact evenly up on both sides and along the full length of piping or conduit to avoid damage or displacement of piping or conduit. Coordinate backfilling with utilities testing.

F. Place and compact final backfill of satisfactory soil to final subgrade elevation.

G. Install warning tape directly above utilities, 12 inches (300 mm) below finished grade, except 6 inches (150 mm) below subgrade under pavements and slabs.

3.13 SOIL FILL

A. Plow, scarify, bench, or break up sloped surfaces steeper than 1 vertical to 4 horizontal so fill material will bond with existing material.

B. Place and compact fill material in layers to required elevations as follows:

1. Under grass and planted areas, use satisfactory soil material.
2. Under walks and pavements, use satisfactory soil material.
3. Under steps and ramps, use select granular.
4. Under building slabs, use select granular.
5. Under footings and foundations, use select granular.

C. Place soil fill on subgrades free of mud, frost, snow, or ice.

D. Use Select Granular material for fill within building area.

E. Use Select Granular Material or Satisfactory Material for fill outside of building area.

3.14 SOIL MOISTURE CONTROL

A. Uniformly moisten or aerate subgrade and each subsequent fill or backfill soil layer before compaction to within 2 percent of optimum moisture content.

1. Do not place backfill or fill soil material on surfaces that are muddy, frozen, or contain frost or ice.
2. Remove and replace, or scarify and air dry, otherwise satisfactory soil material that exceeds optimum moisture content by 2 percent and is too wet to compact to specified dry unit weight.

3.15 COMPACTION OF SOIL BACKFILLS AND FILLS

A. Place backfill and fill soil materials in layers not more than 8 inches (200 mm) in loose depth for material compacted by heavy compaction equipment, and not more than 4 inches (100 mm) in loose depth for material compacted by hand-operated tampers.

B. Place backfill and fill soil materials evenly on all sides of structures to required elevations, and uniformly along the full length of each structure.

C. Compact soil materials to not less than the following percentages of maximum dry unit weight according to ASTM D 698:

1. Under structures, building slabs, and steps scarify and recompact top 12 inches (300 mm) of existing subgrade and each layer of backfill or fill soil material at 98 percent.
2. Under walkways and pavement, scarify and recompact top 12 inches (300 mm) below subgrade and compact each layer of backfill or fill soil material at 100 percent within 3 feet below slabs and sidewalks and 95 percent below the upper 3 feet.
3. Under turf or unpaved areas, scarify and recompact top 6 inches (150 mm) below subgrade and compact each layer of backfill or fill soil material at 90 percent.
4. For utility trenches, compact each layer of initial and final backfill soil material at 95 percent.

3.16 GRADING

A. General: Uniformly grade areas to a smooth surface, free of irregular surface changes. Comply with compaction requirements and grade to cross sections, lines, and elevations indicated.

1. Provide a smooth transition between adjacent existing grades and new grades.
2. Cut out soft spots, fill low spots, and trim high spots to comply with required surface tolerances.

B. Site Rough Grading: Slope grades to direct water away from buildings and to prevent ponding. Finish subgrades to required elevations within the following tolerances:

1. Turf or Unpaved Areas: Plus or minus 1 inch (25 mm).
2. Walks: Plus or minus 1 inch (25 mm).
3. Pavements: Plus or minus 1/2 inch (13 mm).

C. Grading inside Building Lines: Finish subgrade to a tolerance of 1/2 inch (13 mm) when tested with a 10-foot (3-m) straightedge.

3.17 BASE COURSES UNDER PAVEMENTS AND WALKS

A. Place base course and on subgrades free of mud, frost, snow, or ice.

B. On prepared subgrade, place base course and under pavements and walks as follows:
1. Place base course material over subgrade course under hot-mix asphalt pavement.
2. Shape base course to required crown elevations and cross-slope grades.
3. Place base course 6 inches (150 mm) or less in compacted thickness in a single layer.
4. Place base course that exceeds 6 inches (150 mm) in compacted thickness in layers of equal thickness, with no compacted layer more than 6 inches (150 mm) thick or less than 3 inches (75 mm) thick.
5. Compact base course at optimum moisture content to required grades, lines, cross sections, and thickness to not less than 95 percent of maximum dry unit weight according to ASTM D 698.

3.18 NON-PAVED AREA PREPARATION

A. Install 4 inches (100mm) on onsite or imported topsoil across all non-paved areas prior to landscape installation.

1. Final elevation of topsoil shall allow for soil thickness of sod.

B. Obtain Architect's acceptance of finish grading prior to initiating landscape installation.

3.19 FIELD QUALITY CONTROL

A. Testing Agency: Contractor will engage a qualified geotechnical engineering testing agency approved by the architect to perform tests and inspections.

B. Allow testing agency to inspect and test subgrades and each fill or backfill layer. Proceed with subsequent earth moving only after test results for previously completed work comply with requirements.

C. Footing Subgrade: At footing subgrades, at least one test of each soil stratum will be performed to verify design bearing capacities. Subsequent verification and approval of other footing subgrades may be based on a visual comparison of subgrade with tested subgrade when approved by Architect.

D. Subgrade: Verify the finished subgrade elevations are within the specified tolerances.

E. Testing agency will test compaction of soils in place according to ASTM D 1556, ASTM D 2167, ASTM D 2922, and ASTM D 2937, as applicable. Tests will be performed at the following locations and frequencies:

1. Paved and Building Slab Areas: At subgrade and at each compacted fill and backfill layer, at least one test for every 2000 sq. ft. (186 sq. m) or less of paved area or building slab, but in no case fewer than three tests.
2. Foundation Wall Backfill: At each compacted backfill layer, at least one test for every 100 feet (30 m) or less of wall length, but no fewer than two tests.
3. Trench Backfill: At each compacted initial and final backfill layer, at least one test for every 150 feet (46 m) or less of trench length, but no fewer than two tests.

F. When testing agency reports that subgrades, fills, or backfills have not achieved degree of compaction specified, scarify and moisten or aerate, or remove and replace soil materials to depth required; recompact and retest until specified compaction is obtained.

3.20 PROTECTION

A. Protecting Graded Areas: Protect newly graded areas from traffic, freezing, and erosion. Keep free of trash and debris.

B. Repair and reestablish grades to specified tolerances where completed or partially completed surfaces become eroded, rutted, settled, or where they lose compaction due to subsequent construction operations or weather conditions.

1. Scarify or remove and replace soil material to depth as directed by testing agency; reshape and recompact.

C. Where settling occurs before Project correction period elapses, remove finished surfacing, backfill with additional soil material, compact, and reconstruct surfacing.

1. Restore appearance, quality, and condition of finished surfacing to match adjacent work, and eliminate evidence of restoration to greatest extent possible.

3.21 DISPOSAL OF SURPLUS AND WASTE MATERIALS

A. Remove surplus satisfactory soil and waste materials, including unsatisfactory soil, trash, and debris, and legally dispose of them off Owner's property.

END OF SECTION 312000

SECTION 312319 - DEWATERING

PART 1 - GENERAL

1.1 RELATED DOCUMENTS

A. Drawings and general provisions of the Contract, including General and Supplementary Conditions and Division 01 Specification Sections, apply to this Section.

1.2 SUMMARY

A. Section includes construction dewatering.

B. Related Sections:
   1. Section 312000 "Earth Moving" for excavating, backfilling, site grading, and for site utilities.

1.3 PERFORMANCE REQUIREMENTS

A. Dewatering Performance: Design, furnish, install, test, operate, monitor, and maintain dewatering system of sufficient scope, size, and capacity to control hydrostatic pressures and to lower, control, remove, and dispose of ground water and permit excavation and construction to proceed on dry, stable subgrades.
   1. Continuously monitor and maintain dewatering operations to ensure erosion control, stability of excavations and constructed slopes, that excavation does not flood, and that damage to subgrades and permanent structures is prevented.
   2. Prevent surface water from entering excavations by grading, dikes, or other means.
   3. Accomplish dewatering without damaging existing buildings, structures, and site improvements adjacent to excavation.
   4. Remove dewatering system when no longer required for construction.

1.4 QUALITY ASSURANCE

A. Installer Qualifications: An experienced installer that has specialized in design of dewatering systems and dewatering work.

B. Regulatory Requirements: Comply with governing EPA notification regulations before beginning dewatering. Comply with hauling and disposal regulations of authorities having jurisdiction.

PART 2 - PRODUCTS (Not Used)

PART 3 - EXECUTION

3.1 PREPARATION

A. Protect structures, utilities, sidewalks, pavements, and other facilities from damage caused by settlement, lateral movement, undermining, washout, and other hazards created by dewatering operations.

1. Prevent surface water and subsurface or ground water from entering excavations, from ponding on prepared subgrades, and from flooding site and surrounding area.
2. Protect subgrades and foundation soils from softening and damage by rain or water accumulation.

B. Install dewatering system to ensure minimum interference with roads, streets, walks, and other adjacent occupied and used facilities.

1. Do not close or obstruct streets, walks, or other adjacent occupied or used facilities without permission from Owner and authorities having jurisdiction. Provide alternate routes around closed or obstructed traffic ways if required by authorities having jurisdiction.

C. Provide temporary grading to facilitate dewatering and control of surface water.

D. Monitor dewatering systems continuously.

E. Promptly repair damages to adjacent facilities caused by dewatering.

F. Protect and maintain temporary erosion and sedimentation controls, which are specified in Section 311000 "Site Clearing" during dewatering operations.

3.2 INSTALLATION

A. Install dewatering system utilizing wells, well points, or similar methods complete with pump equipment, standby power and pumps, filter material gradation, valves, appurtenances, water disposal, and surface-water controls.

1. Space well points or wells at intervals required to provide sufficient dewatering.
2. Use filters or other means to prevent pumping of fine sands or silts from the subsurface.

B. Before excavating below ground-water level, place system into operation to lower water to specified levels. Operate system continuously until drains, sewers, and structures have been constructed and fill materials have been placed or until dewatering is no longer required.

C. Provide an adequate system to lower and control ground water to permit excavation, construction of structures, and placement of fill materials on dry subgrades. Install sufficient dewatering equipment to drain water-bearing strata above and below bottom of foundations, drains, sewers, and other excavations.

1. Do not permit open-sump pumping that leads to loss of fines, soil piping, subgrade softening, and slope instability.

D. Reduce hydrostatic head in water-bearing strata below subgrade elevations of foundations, drains, sewers, and other excavations.

1. Maintain water level a minimum of 24 inches (600 mm) below surface of excavation.

E. Dispose of water removed by dewatering in a manner that avoids endangering public health, property, and portions of work under construction or completed. Dispose of water and sediment in a manner that avoids inconvenience to others. Provide sumps, sedimentation tanks, and other flow-control devices as required by authorities having jurisdiction.

F. Provide standby equipment on site, installed and available for immediate operation, to maintain dewatering on continuous basis if any part of system becomes inadequate or fails. If dewatering requirements are not satisfied due to inadequacy or failure of dewatering system, restore damaged structures and foundation soils at no additional expense to Owner.

1. Remove dewatering system from Project site on completion of dewatering. Plug or fill well holes with sand or cut off and cap wells a minimum of 36 inches (900 mm) below overlying construction.

G. Damages: Promptly repair damages to adjacent facilities caused by dewatering operations.

3.3 FIELD QUALITY CONTROL

A. Provide continual observation to ensure that subsurface soils are not being removed by the dewatering operation.

END OF SECTION 312319

SECTION 329113 - SOIL PREPARATION

PART 1 - GENERAL

1.1 RELATED DOCUMENTS

A. Drawings and general provisions of the Contract, including General and Supplementary Conditions and Division 01 Specification Sections, apply to this Section.

1.2 SUMMARY

A. Section includes planting soils specified by composition of the mixes.

B. Related Requirements:
   1. Section 329200 "Turf and Grasses" for placing planting soil for turf and grasses.

1.3 DEFINITIONS

A. AAPFCO: Association of American Plant Food Control Officials.

B. Backfill: The earth used to replace or the act of replacing earth in an excavation. This can be amended or unamended soil as indicated.

C. CEC: Cation exchange capacity.

D. Compost: The product resulting from the controlled biological decomposition of organic material that has been sanitized through the generation of heat and stabilized to the point that it is beneficial to plant growth.

E. Duff Layer: A surface layer of soil, typical of forested areas, that is composed of mostly decayed leaves, twigs, and detritus.

F. Imported Soil: Soil that is transported to Project site for use.

G. Layered Soil Assembly: A designed series of planting soils, layered on each other, that together produce an environment for plant growth.

H. Manufactured Soil: Soil produced by blending soils, sand, stabilized organic soil amendments, and other materials to produce planting soil.

I. NAPT: North American Proficiency Testing Program. An SSSA program to assist soil-, plant-, and water-testing laboratories through interlaboratory sample exchanges and statistical evaluation of analytical data.

J. Organic Matter: The total of organic materials in soil exclusive of undecayed plant and animal tissues, their partial decomposition products, and the soil biomass; also called "humus" or "soil organic matter."

K. Planting Soil: Existing, on-site soil; imported soil; or manufactured soil that has been modified as specified with soil amendments and perhaps fertilizers to produce a soil mixture best for plant growth.

L. RCRA Metals: Hazardous metals identified by the EPA under the Resource Conservation and Recovery Act.

M. SSSA: Soil Science Society of America.

N. Subgrade: Surface or elevation of subsoil remaining after excavation is complete, or the top surface of a fill or backfill before planting soil is placed.

O. Subsoil: Soil beneath the level of subgrade; soil beneath the topsoil layers of a naturally occurring soil profile, typified by less than one percent (1%) organic matter and few soil organisms.

P. Surface Soil: Soil that is present at the top layer of the existing soil profile. In undisturbed areas, surface soil is typically called "topsoil"; but in disturbed areas such as urban environments, the surface soil can be subsoil.

Q. USCC: U.S. Composting Council.

1.4 PREINSTALLATION MEETINGS

A. Preinstallation Conference: Conduct conference at Project site.

1.5 QUALITY ASSURANCE AND ACTION SUBMITTALS

A. Test Reports:
   1. Provide qualifications tests and information for topsoil either imported or on-site material.
   2. Submittal to be prepared by independent testing lab, state university soils science department, or other recognized soil physics testing laboratory to indicate that proposed material complies with specified requirements.
      a. Mechanical gradation analysis, ASTM D422.
      b. Materials qualification test.
      c. Recommendation for type and application rates of amendments needed to adjust topsoil to required nutrient levels for each proposed landscape operation, including sodding and planting.

1.6 DELIVERY, STORAGE, AND HANDLING

A. Packaged Materials: Deliver packaged materials in original, unopened containers showing weight, certified analysis, name and address of manufacturer, and compliance with state and Federal laws if applicable.

B. Bulk Materials:
   1. Do not dump or store bulk materials near structures, utilities, walkways and pavements, or on existing turf areas or plants.
   2. Provide erosion-control measures to prevent erosion or displacement of bulk materials, discharge of soil-bearing water runoff, and airborne dust reaching adjacent properties, water conveyance systems, or walkways.
   3. Do not move or handle materials when they are wet or frozen.
   4. Accompany each delivery of bulk fertilizers and soil amendments with appropriate certificates.

PART 2 - PRODUCTS

2.1 MATERIALS

A. Topsoil: Type D & G as specified in Specification Section 312000.
   1. Material consisting of fertile, friable, fine sandy loam, uniform in composition &
   2. Capable of sustaining vigorous plant growth.
   3. Free of subsoil, stones, lumps, clods of hard earth, plants, plant roots, sticks, noxious weeds, slag, cinders, demolition debris, or other extraneous matter over 1 inch in any dimension.

2.2 SOIL PREPARATION / AMENDMENT MATERIALS

A. Fertilizer: Slow Release / Controlled Release, of proportion necessary to eliminate any deficiencies of topsoil, meeting the requirements of the Minnesota Department of Transportation Standard Specification Section 3881.

B. Peat Moss: Shredded, loose, sphagnum moss; free of lumps, roots, inorganic material or acidic materials; minimum of eighty five percent (85%) organic material measured by oven dry weight, pH range of four to five (4 to 5); moisture content of thirty percent (30%), meeting the requirements of the Minnesota Department of Transportation Standard Specification Section 3880.

C. Bone Meal: Raw, finely ground, commercial grade, minimum of three percent (3%) nitrogen and twenty percent (20%) phosphorous.

D. Agricultural Lime: Ground limestone, dolomite type, minimum eighty percent (80%) carbonates which shall meet the requirements of the Minnesota Department of Transportation Standard Specification Section 3879.

E. Agricultural Gypsum: Finely ground, containing a minimum of 90 calcium sulfate.

F. Perlite: Horticultural perlite, soil amendment grade.

G. Compost: Shall meet the requirements of the Minnesota Department of Transportation Standard Specification Section 3890.2 B "Grade 2 Compost".

H. Topsoil: Salvaged top 6” horizon, organic loam soils from site.

I. Topsoil: Imported, Select Topsoil Borrow which shall meet the requirements of the Minnesota Department of Transportation Standard Specification Section 3877.

J. Sand: Imported, shall meet the requirements of the Minnesota Department of Transportation Standard Specification for 3149.2 B2 "Select Granular Borrow".

K. Water: Clean, fresh and free of substances or matter which could inhibit vigorous growth of plants.

PART 3 - EXECUTION

3.1 EXAMINATION

A. Examine areas and conditions under which topsoil preparation and placement are to be performed.

B. Verify final subgrade elevation has been established.

C. Verify subsoil base has been contoured and compacted.

D. Verify compaction requirements have not been exceeded.

E. Verify topsoil meets requirements of this Section and soils testing lab report identifying required amendments is completed.

F. If conditions do not meet the approval and there are any discrepancies, immediately notify the L.A./E., proceeding with Work without notifying the L.A./E. implies acceptance of conditions.

3.2 STORAGE / STOCKPILE

A. Remove and stockpile topsoil materials in such a manner that natural drainage is not obstructed, and that no off-site sediment transmission will result.

B. Place stockpiles with maximum 3:1 side slopes.

C. Maximum height of stockpile shall not exceed eight feet (8').

D. Construct a temporary perimeter dike with gravel outlet, or fabric sediment barrier around topsoil component stockpiles.

E. Erosion control silt fence shall be placed around the stockpile.

F. Provide temporary seeding of stockpiles within two (2) days of formation of stockpile.

3.3 SUBSTRATE PREPARATION

A. Remove subgrade soils as necessary to achieve proper subgrade elevation to accommodate finished grade of topsoil mixture and mulch, where applicable.

B. Eliminate uneven areas and low spots, maintain indicated grades and make changes in grade gradual by blending slopes into more level areas.

C. Scarify or till subgrade to a six inch (6") minimum depth for all areas where topsoil is scheduled, as indicated on plans, using a culti-mulcher or similar equipment of sufficient size and mass to manipulate soils to the proper depth and shall meet the approval of the L.A./E..

D. Scarify or till subgrade in areas where equipment is used for hauling and spreading, and any other areas of highly compacted subsoil.

E. After scarifying or tilling of the subgrade, the Contractor shall remove roots, branches, clods of hard earth, stones larger than one inch (1") in any dimension, any subsoil contamination, and debris, including excess construction materials such as excess concrete, or any other extraneous non-earth material in excess of one inch (1") in any dimension.

F. Prior to placement of topsoil, the Contractor shall notify the L.A./E. and arrange for an inspection of the prepared subgrade. Subgrade elevations and slopes that do not meet the L.A./E.'s approval shall be re-worked by the Contractor, at Contractor's expense, until approval is gained from the L.A./E.

3.4 PLACING TOPSOIL OVER EXPOSED SUBGRADE

A. Do not place topsoil more than two (2) weeks prior to planned commencement of Project plant and turf installation operations.

B. Do not place topsoil when subgrade is excessively wet or in a condition that may be otherwise detrimental to subsequent Work.

C. Use topsoil in relatively dry state. Place during dry weather.

D. Manually spread topsoil in areas close to trees, plants, buildings, and pavement.

E. Remove roots, weeds, rocks over one inch (1") in any dimension, and any foreign material while spreading.

F. Fine grade topsoil, eliminating rough or low areas. Maintain profiles and contour or subgrade.

G. Lightly compact placed topsoil mixture, avoid excessive compaction of topsoil.

3.5 TOLERANCES

A. Top of Topsoil at common areas: Plus or minus two inches (2") over ten foot (10') span.

B. Top of Topsoil at field areas: Plus or minus one-quarter inch (1/4") over ten foot (10') span.

3.6 SCHEDULES

A. Compacted topsoil thickness at the following areas:
   1. All non-paved areas, not including infiltration basins: four inches (4") lightly compacted.
   2. All lawn areas within ballfield fencing: six inches (6") lightly compacted.

3.7 RESTORATION, CLEANUP & PROTECTION

A. Leave stockpile area and site clean and raked, ready to receive turf and landscaping.

B. Protect landscaping and other features remaining as Final Work.

C. Protect existing structures, fences, sidewalks, utilities, paving and curbs.

D. Remove of all equipment and materials from Project Site.

E. Remove all debris, waste, weeds, surplus topsoil mixture, etc. and dispose of off-site – divert from landfill disposal whenever possible.

F. Any materials containing foreign materials resulting from Contractor’s operations including oil drippings, fuel spills, etc. shall be disposed of legally.

3.8 PROJECT CLOSEOUT

A. Submit written certification that Contract Documents have been reviewed, Work has been inspected and approved, and that Work is in accordance with the Contract Documents. Provide submittals to the L.A./E. that are required by governing or other authorities.

B. Submit final Application for Payment identifying total adjusted Contract Sum, previous payments, and sum remaining due.

A.

END OF SECTION 329113

SECTION 329200 - TURF AND GRASSES

PART 1 - GENERAL

1.1 RELATED DOCUMENTS

A. Drawings and general provisions of the Contract, including General and Supplementary Conditions and Division 01 Specification Sections, apply to this Section.

1.2 SUMMARY

A. Section Includes:
   1. Seeding.
   2. Mulching.
   3. Maintenance.

1.3 DEFINITIONS

A. Finish Grade: Elevation of finished surface of planting soil.

B. Pesticide: A substance or mixture intended for preventing, destroying, repelling, or mitigating a pest. Pesticides include insecticides, miticides, herbicides, fungicides, rodenticides, and molluscicides. They also includes substances or mixtures intended for use as a plant regulator, defoliant, or desiccant.

C. Pests: Living organisms that occur where they are not desired or that cause damage to plants, animals, or people. Pests include insects, mites, grubs, mollusks (snails and slugs), rodents (gophers, moles, and mice), unwanted plants (weeds), fungi, bacteria, and viruses.

D. Planting Soil: Existing, on-site soil; imported soil; or manufactured soil that has been modified with soil amendments and perhaps fertilizers to produce a soil mixture best for plant growth. See Section 329113 "Soil Preparation" and drawing designations for planting soils.

E. Subgrade: The surface or elevation of subsoil remaining after excavation is complete, or the top surface of a fill or backfill before planting soil is placed.

1.4 PREINSTALLATION MEETINGS

A. Preinstallation Conference: Conduct conference at Project site.

1.5 INFORMATIONAL SUBMITTALS

A. Qualification Data: For landscape Installer.

B. Certification of Grass Seed: From seed vendor for each grass-seed monostand or mixture, stating the botanical and common name, percentage by weight of each species and variety, and percentage of purity, germination, and weed seed. Include the year of production and date of packaging.

C. Product Certificates: For fertilizers, from manufacturer.

D. Pesticides and Herbicides: Product label and manufacturer's application instructions specific to Project.

1.6 QUALITY ASSURANCE

A. Installer Qualifications: A qualified landscape installer whose work has resulted in successful turf and meadow establishment.
   1. Professional Membership: Installer shall be a member in good standing of either the Professional Landcare Network or the American Nursery and Landscape Association.
   2. Experience: Five (5) years' experience in turf installation
   3. Installer's Field Supervision: Require Installer to maintain an experienced full-time supervisor on Project site when work is in progress.
   4. Personnel Certifications: Installer's field supervisor shall have certification in one of the following categories from the Professional Landcare Network:
      a. Landscape Industry Certified Technician - Exterior.
      b. Landscape Industry Certified Lawncare Manager.
      c. Landscape Industry Certified Lawncare Technician.
   5. Pesticide Applicator: State licensed, commercial.

1.7 DELIVERY, STORAGE, AND HANDLING

A. Seed and Other Packaged Materials: Deliver packaged materials in original, unopened containers showing weight, certified analysis, name and address of manufacturer, and indication of compliance with state and Federal laws, as applicable.

B. Bulk Materials:
   1. Do not dump or store bulk materials near structures, utilities, walkways and pavements, or on existing turf areas or plants.
   2. Provide erosion-control measures to prevent erosion or displacement of bulk materials; discharge of soil-bearing water runoff; and airborne dust reaching adjacent properties, water conveyance systems, or walkways.
   3. Accompany each delivery of bulk materials with appropriate certificates.

1.8 FIELD CONDITIONS

A. Weather Limitations: Proceed with planting only when existing and forecasted weather conditions permit planting to be performed when beneficial and optimum results may be obtained. Apply products during favorable weather conditions according to manufacturer's written instructions.

PART 2 - PRODUCTS

2.1 SEED

A. Grass Seed: Fresh, clean, dry, new-crop seed complying with AOSA's "Rules for Testing Seeds" for purity and germination tolerances.
B. Seed Species:
   1. Quality: Seed of grass species as listed below for solar exposure, with not less than eighty five percent (85%) germination, not less than ninety five percent (95%) pure seed, and not more than half a percent (**0.5%)** weed seed:

C. Grass-Seed Mix: Proprietary seed mix as follows:

1. Products: Subject to compliance with requirements, available products that may be incorporated into the Work include, but are not limited to, the following:

    a. Turf Seed Mixture:
       40% Turf Gem Tall Fescue
       30% Boreal Creeping Red Fescue
       15% Park Kentucky Bluegrass
       15% Perennial Ryegrass

2.2 FERTILIZERS

A. Fertilizer shall be a commercial grade, uniform in composition, free-flowing material suitable for application with approved standard equipment. The fertilizer shall conform to the State of Minnesota fertilizer laws and shall be delivered to the project in the original, unopened containers, each bearing the manufacturer's guarantee, analysis, name and trademark. Labels from fertilizer and herbicide containers shall be saved and delivered to the Project Manager and/or Owner Representative, if requested, at the end of each day that applications are made.

B. On the day of seeding, fertilizer shall contain at least the minimum analysis of five percent (5%) total Nitrogen, twenty percent (20%) Phosphoric acid, twenty percent (20%) water soluble Potash (5-20-20) applied at the rate of ten (10) pounds per 1000 square feet. A second fertilizer application of slow release seventeen percent (17%) total Nitrogen, three percent (3%) Phosphoric Acid, seventeen percent (17%) water soluble Potash (17-3-17) will be applied at the rate of six (6) pounds per 1000 feet approximately eight weeks later, or as recommended by manufacturer.

2.3 MULCHES

A. Hydromulch shall conform to Type 8 Bonded Fiber Matrix Hydraulic Soil Stabilizer, conforming to MnDOT specification section 3884.

2.4 WATER

A. The Contractor will secure water as needed for turf establishment. Water may be available from the Park fire hydrant within the Park Property at no cost to the Contractor, if one exists.

B. Water may be available from City fire hydrants within the street right of way by obtaining a permit from the City.

C. If a sufficient water source is not available from City fire hydrants, the Contractor shall obtain water from other sources as required to fully establish turf. All costs associated shall be incidental to the Contract.

PART 3 - EXECUTION

3.1 EXAMINATION

A. Examine areas to be planted for compliance with requirements and other conditions affecting installation and performance of the Work.
   1. Verify that no foreign or deleterious material or liquid such as paint, paint washout, concrete slurry, concrete layers or chunks, cement, plaster, oils, gasoline, diesel fuel, paint thinner, turpentine, tar, roofing compound, or acid has been deposited in soil within a planting area.
   2. Suspend planting operations during periods of excessive soil moisture until the moisture content reaches acceptable levels to attain the required results.
   3. Uniformly moisten excessively dry soil that is not workable or which is dusty.

B. Proceed with installation only after unsatisfactory conditions have been corrected.

C. If contamination by foreign or deleterious material or liquid is present in soil within a planting area, remove the soil and contamination as directed by L.A./E. and replace with new planting soil.

3.2 PREPARATION

A. Protect structures; utilities; sidewalks; pavements; and other facilities, trees, shrubs, and plantings from damage caused by planting operations.
   1. Protect adjacent and adjoining areas from hydromulching overspray.
   2. Protect grade stakes set by others until directed to remove them.

B. Install erosion-control measures to prevent erosion or displacement of soils and discharge of soil-bearing water runoff or airborne dust to adjacent properties and walkways.

3.3 TURF AREA PREPARATION

A. General: Prepare planting area for soil placement and mix planting soil according to Section 329113 "Soil Preparation."

B. Moisten prepared area before planting if soil is dry. Water thoroughly and allow surface to dry before planting. Do not create muddy soil.

C. Before planting, obtain L.A./E.'s acceptance of finish grading; restore planting areas if eroded or otherwise disturbed after finish grading.

3.4 PREPARATION FOR EROSION-CONTROL MATERIALS

A. Prepare area as specified in "Turf Area Preparation" Article.

B. For erosion-control mats, install planting soil in two lifts, with second lift equal to thickness of erosion-control mats. Install erosion-control mat and fasten as recommended by material manufacturer.

C. Fill cells of erosion-control mat with planting soil and compact before planting.

D. For erosion-control blanket or mesh, install from top of slope, working downward, and as recommended by material manufacturer for site conditions. Fasten as recommended by material manufacturer.

E. Moisten prepared area before planting if surface is dry. Water thoroughly and allow surface to dry before planting. Do not create muddy soil.

3.5 SEEDING

A. Sow seed with seeding machine. Do not drop seed when wind velocity exceeds 5 mph.
   1. Evenly distribute seed by sowing equal quantities in two (2) directions at right angles to each other.
   2. Do not use wet seed or seed that is moldy or otherwise damaged.
   3. Do not seed against existing trees. Limit extent of seed to outside edge of planting saucer.

B. Sow seed at a total rate of 6-8 lbs/1000 sq. ft.

C. Do not seed areas in excess of that which can be mulched on same day.

D. Do not apply seed immediately following rain, when ground is too dry, or during windy periods.

E. Apply seed with a **Brillion** slit seeder.

F. Immediately following seeding install applicable mulch.

G. Hydro-Mulch application shall be done in accordance with MnDOT specification section 3882. Take care to prevent any of the hydro-mulch from being sprayed onto any hardscaped areas of the site (walks, buildings, equipment, etc.). Contractor shall clean hydro-mulch off all areas that are not intended to be sprayed

H. Lightly roll seeded and mulched area to achieve even, uniform surface.

I. Apply water with a fine spray immediately after each area has been mulched. Saturate to four inches (4") of soil.

3.6 TURF MAINTENANCE

A. General: Maintain and establish turf by watering, fertilizing, weeding, mowing, trimming, replanting, and performing other operations as required to establish healthy, viable turf. Roll, regrade, and replant bare or eroded areas and remulch to produce a uniformly smooth turf. Provide materials and installation the same as those used in the original installation.
   1. Fill in as necessary soil subsidence that may occur because of settling or other processes. Replace materials and turf damaged or lost in areas of subsidence.
   2. In areas where mulch has been disturbed by wind or maintenance operations, add new mulch and anchor as required to prevent displacement.
   3. Apply treatments as required to keep turf and soil free of pests and pathogens or disease. Use integrated pest management practices whenever possible to minimize the use of pesticides and reduce hazards.

B. Watering: Install and maintain temporary piping, hoses, and turf-watering equipment to convey water from sources and to keep turf uniformly moist to a depth of 4 inches.
   1. Schedule watering to prevent wilting, puddling, erosion, and displacement of seed or mulch. Lay out temporary watering system to avoid walking over muddy or newly planted areas.
   2. Water turf with fine spray at a minimum rate of 1 inch per week unless rainfall precipitation is adequate.

C. Mow turf as soon as top growth is tall enough to cut. Repeat mowing to maintain specified height without cutting more than one-third of grass height. Remove no more than one-third of grass-leaf growth in initial or subsequent mowings. Do not delay mowing until grass blades bend over and become matted. Do not mow when grass is wet. Schedule initial and subsequent mowings to maintain the following grass height:
   1. Mow Kentucky bluegrass to a height of one and a half to two inches (1-1/2 to 2").
   2. Mow turf-type tall fescue to a height of two to three inches (2-3").

3.7 SATISFACTORY TURF

A. Turf installations shall meet the following criteria as determined by L.A./E.:
   1. Satisfactory Seeded Turf: At end of maintenance period, a healthy, uniform, close stand of grass has been established, free of weeds and surface irregularities, with coverage exceeding ninety percent (90%) over any ten (10) sq. ft. and bare spots not exceeding five by five inches (5x5").

B. Use specified materials to reestablish turf that does not comply with requirements and continue maintenance until turf is satisfactory.

3.8 CLEANUP AND PROTECTION

A. Promptly remove soil and debris created by turf work from paved areas. Clean wheels of vehicles before leaving site to avoid tracking soil onto roads, walks, or other paved areas.

B. Remove surplus soil and waste material, including excess subsoil, unsuitable soil, trash, and debris, and legally dispose of them off Owner's property.

C. Erect temporary fencing or barricades and warning signs as required to protect newly planted areas from traffic. Maintain fencing and barricades throughout initial maintenance period and remove after plantings are established.

3.9 MAINTENANCE SERVICE

A. Turf Maintenance Service: Provide full maintenance by skilled employees of landscape Installer. Maintain as required in "Turf Maintenance" Article. Begin maintenance immediately after each area is planted and continue until acceptable turf is established, but for not less than the following periods:
   1. Seeded Turf: The longer of 60 days from date of planting completion or Substantial Completion.

END OF SECTION 329200

APPENDIX A

CONSTRUCTION CONTINGENCY PLAN

CONSTRUCTION CONTINGENCY PLAN

OHUTA BEACH PHASE I IMPROVEMENTS PROJECT

OHUTA BEACH
LAKE CITY, WABASHA COUNTY, MINNESOTA

September 11, 2020

Prepared for:
Megan Smith
Planning and Community Development Director
205 West Center Street
Lake City, Minnesota 55041

WSB PROJECT NO. R-015605-000

CONSTRUCTION CONTINGENCY PLAN

Ohuta Beach Improvements Project - Phase I

For:

City of Lake City

September 11, 2020

Prepared By:

TABLE OF CONTENTS

TITLE PAGE
TABLE OF CONTENTS

1. INTRODUCTION 1
   1.1 Project Overview 1
   1.2 Previous Investigations and Background Review 1
   1.3 Current Conditions and Proposed Future Development 1
2. CONSTRUCTION CONTINGENCY PLAN 2

ATTACHMENTS

Attachment 1 – Project Location Map and Phase I Project Plans
Attachment 2 – Best Management Practices for the Off-Site Reuse of Unregulated Fill

1. INTRODUCTION

WSB was retained by the City of Lake City (the City) to prepare this Construction Contingency Plan (CCP) for the proposed Ohuta Beach Phase I Improvements Project located in Lake City, Wabasha County, Minnesota (the Project). The construction limits for the Project are approximately 0.6 acres in size and are located between Chestnut Street, Harbor Drive, and Lake Street Northwest with a portion of the underground utility improvements extending 200 feet southwest across Harbor Drive and the adjacent parking lot. A Project Location Map and the Phase I Project Plans are included as **Attachment 1**.

1.1 Project Overview

The majority of Phase I Project area currently consists of green space that will be converted to seasonal trailer home sites with a small portion of the utility work extending below the paved parking lot south/southwest of Harbor Drive.

1.2 Previous Investigations and Background Review

The following documents were reviewed for this Project:

- *Geotechnical Report, Ohuta Beach Improvements, Lake City, Minnesota*, dated July 22, 2020 by WSB (2020 Geotechnical Report).

The 2020 Geotechnical Report evaluated subsurface conditions at the Project area and provided recommendations for suitable foundation type(s), allowable soil bearing pressure for footing design, and other geotechnical related design and construction considerations. On May 11, 2020 WSB advanced three (3) geotechnical soil borings (PB-10, PB-11, and PB-12) at the Phase I Project area and subsurface findings identified fill materials including debris ranging in depth between 0.25 and 8 feet below grade. Boring PB-10 identified fill soils with pieces of brick at depths between 0.25 and 8 feet below grade, boring PB-11 identified layers of concrete with crushed rock, sand and gravel at depths between 0.5 and 5.5 feet below grade and boring PB-12 identified fill soils with roots and pieces of bituminous at depths between 0.5 and 5 feet below grade.

In addition to the fill/debris impacts identified in the 2020 Geotechnical Report, WSB also identified a petroleum release at the Lake City Marina (LS0001292) which is plotted south of the Project area at 201 South Franklin Street. According to the Minnesota Pollution Control Agency (MPCA) “What’s in My Neighborhood” database, the release was reported on May 2, 1989 and was identified as gasoline (type unknown). The MPCA issued site closure on July 6, 1989. Additional release details including the exact location, size and extent of the release are unknown, and a file review was not completed for the purpose of this CCP.

1.3 Current Conditions and Proposed Future Development

The Project Location is currently occupied by green space that will be converted to seasonal trailer home sites with a small portion of the utility improvements extending southwest across Harbor Drive and the adjacent paved parking lot. Proposed Phase I improvements include various removals (trees, utilities, paved surface, etc.), site grading, construction of aggregate pads, utility improvements, and site restoration. It is anticipated that the City will begin the project in October 2020.

2. CONSTRUCTION CONTINGENCY PLAN

If previously unidentified contaminated media (soil, groundwater, sediment, etc.) is encountered, then this CCP will be implemented. The contaminated media will be handled according to the procedures listed below. The Contractor will comply with all applicable state and federal health and safety regulations for handling pollutants, contaminants, or hazardous substances, wastes, or material, including but not limited to 29 CFR Part 1910 and all subsequent revisions.

For the purposes of this CCP, indicators of soil contamination may include, but are not limited to the following:

- Odors including petroleum, chemical, or any other unusual chemical-like aromas.
- Staining including green, black (non-organic), gray or other soils with non-native color(s), or unusual texture(s).
- Sheen (rainbow) on water or soil surfaces.
- Organic vapor readings measured by a photoionization detector (PID) above background and/or 10 parts per million (ppm).

Indicators of regulated wastes include, but are not limited to the following:

- Cans, bottles, glass, scrap metal, and wood (indicators of solid waste or undocumented dumping/disposal).
- Concrete and asphalt rubble (indicators of demolition waste).
- Roofing materials, shingles, siding, vermiculite, floor tiles, any fibrous material, painted material or paint chips (indicators of demolition waste that could contain asbestos, lead or other chemicals).
- Culverts or other pipes with tar-like coating, insulation or transite (indicators of asbestos).
- Ash or clinkers (indicators of burning).
- Sandblast residue (could contain lead or other metals).
- Treated green, brown, or creosote treated wood (treated wood disposal is regulated).
- Chemical containers such as storage tanks, drums, filters and other containers (possible sources of chemical contaminants).
- Old basements with intact floor tiles or insulation (could contain asbestos), sumps (could contain chemical waste), waste traps (could contain oily waste), wells/dry wells, and cesspools (could contain chemical or oily wastes).

If onsite observations (e.g., elevated organic vapor detector readings, underground storage tanks, transformers, debris, visual or olfactory evidence, etc.) indicate previously undocumented contamination or if a potential hazardous substance or material is encountered, the following procedures will be followed:

1) All work in the immediate area shall cease and the City will be immediately notified. Work outside the vicinity of the contamination can continue if conditions remain safe for project personnel and the surrounding community.

2) The City or their authorized representative will be responsible for notifying regulatory agencies and other parties, as necessary or required. Minnesota Pollution Control Agency (MPCA) contact information is noted below:

   MPCA Contact
   Minnesota Duty Officer
   Division of Emergency Management
   651-649-5451 or 1-800-422-0798

3) After determining that the environment is safe and using appropriate safety measures, the City's Environmental Consultant will conduct an onsite assessment of the unearthed material, substance, or groundwater. The assessment will include conducting a visual survey and documentation of site conditions and field screening for the presence of volatile organic vapors. If deemed necessary, samples may be collected for laboratory and/or field analysis in accordance with MPCA Guidance or to comply with landfill disposal requirements. Sampling procedures will be dependent on field observation(s) and the location(s) and type(s) of material encountered. The MPCA's "Best Management Practices for the Off-Site Reuse of Unregulated Fill" guidance document (see **Attachment 2**) requires that unregulated fill meets the following parameters for unregulated reuse:

   - Free from solid waste, debris, asbestos-containing material, visual staining, and chemical odor.
   - Organic vapors less than 10 ppm, as measured by a PID.
   - For petroleum-impacted soil, less than 100 milligrams per kilogram (mg/kg) Diesel Range Organics (DRO) / Gasoline Range Organics (GRO).
   - For contaminants detected in soil, less than the MPCA's Residential Soil Reference Values (SRVs) and Tier 1 Soil Leaching Values (SLVs).

To avoid potential problems or public concern stemming from the placement of unregulated fill in sensitive settings, the MPCA recommends the following Best Management Practices:

- Avoid placing unregulated fill at schools, playgrounds, daycares, and residential properties. Unregulated fill is most suitable for use at industrial or commercial properties.
- Avoid placing unregulated fill in gardens where food for human/animal ingestion will be grown.
- Observe a minimum ten-foot separation distance between unregulated fill and the water table.
- Avoid placing unregulated fill where contaminants may be transported by run-off to lakes, rivers, wetlands, or streams.

4) The construction crew will be directed to **call 911** if an Immediately Dangerous to Life and Health (IDLH) condition is identified. Personnel not trained in hazard recognition will be directed to keep clear of the potentially hazardous substance until the material has been identified.

The following are the key personnel involved in the project:

Project Owner
Lake City
205 West Center Street, Lake City, Minnesota 55041
Name: Megan Smith, Planning and Community Development Director
Phone: 651-345-6807, Email: msmith@ci.lake-city.mn.us

Environmental Consultant
WSB, 701 Xenia Avenue South Suite 300, Minneapolis, MN 55416
Project Manager: Jeffrey Rice, PG, CHMM
Phone: 763-270-3471, Email: jrice@wsbeng.com

Excavation Contractor
To be determined

Trucking Contractor
To be determined

ATTACHMENT 1

Ohuta Beach Phase I Project

Lake City, Minnesota

WSB & Associates, Inc. Project No. 015605-000
Issue Date..... September 11, 2020

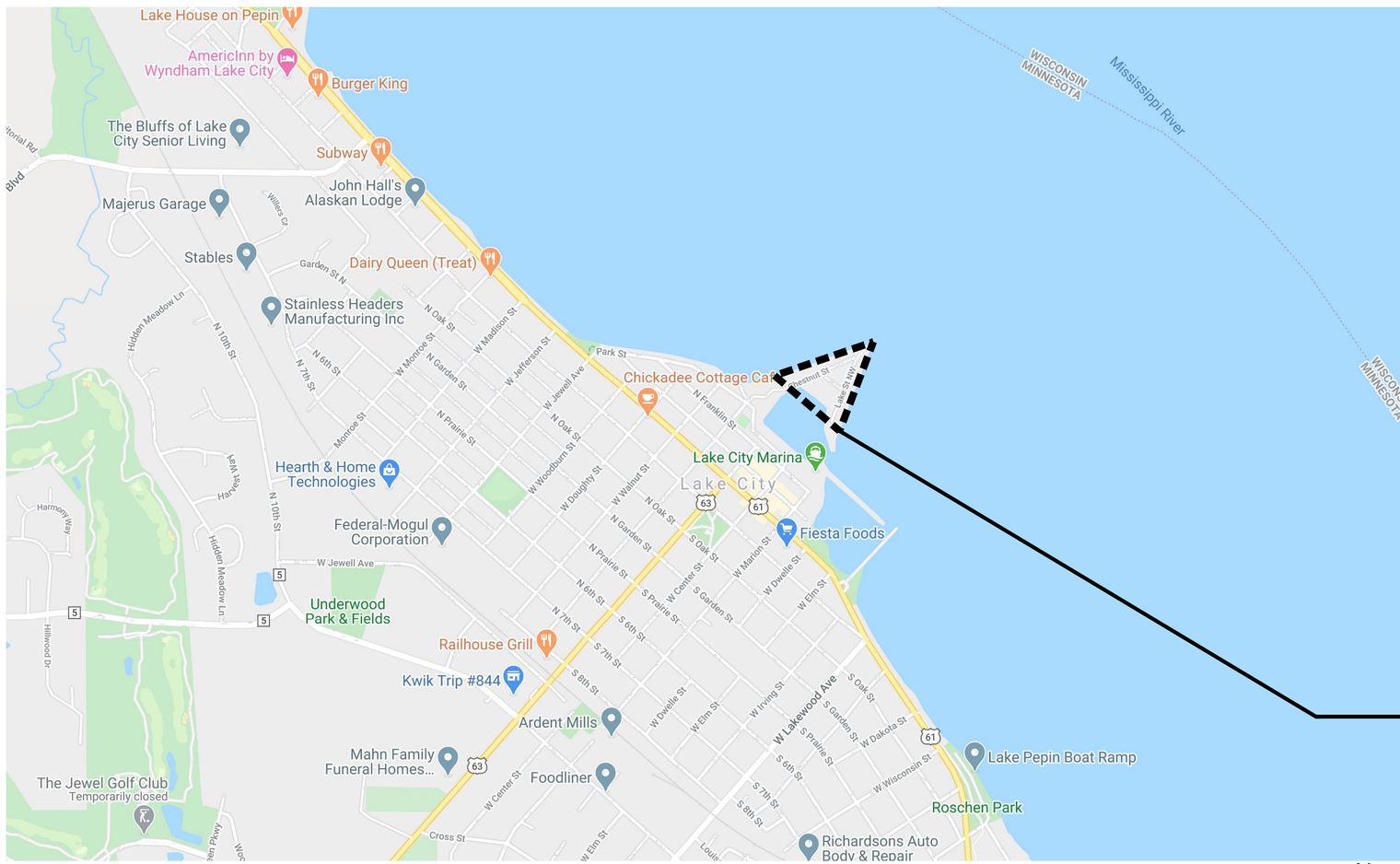

1 L1.0 **PROJECT LOCATION MAP**

N

Sheet List Table	
Sheet Number	Sheet Title
L1.0	COVER SHEET
L2.0	OVERALL REMOVALS PLAN
L3.0	OVERALL LAYOUT PLAN
L4.0	OVERALL GRADING & RESTORATION PLAN
L5.0	EROSION AND PAVEMENT DETAILS
C1.0	OVERALL UTILITY PLAN
C1.1	MISC UTILITY DETAILS
E0.1	ELECTRICAL TITLE SHEET
E1.1	ELECTRICAL SITE PLAN
E2.1	ELECTRICAL DETAILS

THE SUBSURFACE UTILITY INFORMATION SHOWN ON THESE DRAWINGS CONCERNING TYPE AND LOCATION OF PRIVATE UTILITIES HAS BEEN DESIGNATED UTILITY QUALITY LEVEL D. THESE QUALITY LEVELS WERE DETERMINED ACCORDING TO THE GUIDELINES OF CI/ASCE 38-02, ENTITLED "STANDARD GUIDELINES FOR THE COLLECTION AND DEPICTION OF EXISTING SUBSURFACE DATA". THE CONTRACTOR IS TO DETERMINE THE TYPE AND LOCATION OF PRIVATE UTILITIES AS MAY BE DEEMED NECESSARY TO AVOID DAMAGE THERETO.

K:\015605-000\Cad\Plan\#1 BID PACKAGE\015605-000 L-TITL-PLAN_B1.dwg 9/11/2020 1:42:03 PM

wsb

WSB PROJECT NO.: 015605-000

SCALE:	DESIGN BY:
AS SHOWN	JLA
PLAN BY:	CHECK BY:
SDF	JLA

REVISIONS

NO.	DATE	DESCRIPTION

I HEREBY CERTIFY THAT THIS PLAN, SPECIFICATION, OR REPORT WAS PREPARED BY ME OR UNDER MY DIRECT SUPERVISION AND THAT I AM A DULY LICENSED REGISTERED LANDSCAPE ARCHITECT UNDER THE LAWS OF THE STATE OF MINNESOTA.

STEVEN D. FOSS, PLA

DATE: 09/11/2020 LIC. NO.: 56582

OHUTA BEACH PHASE I PROJECT
LAKE CITY, MN

COVER SHEET

SHEET
L1.0

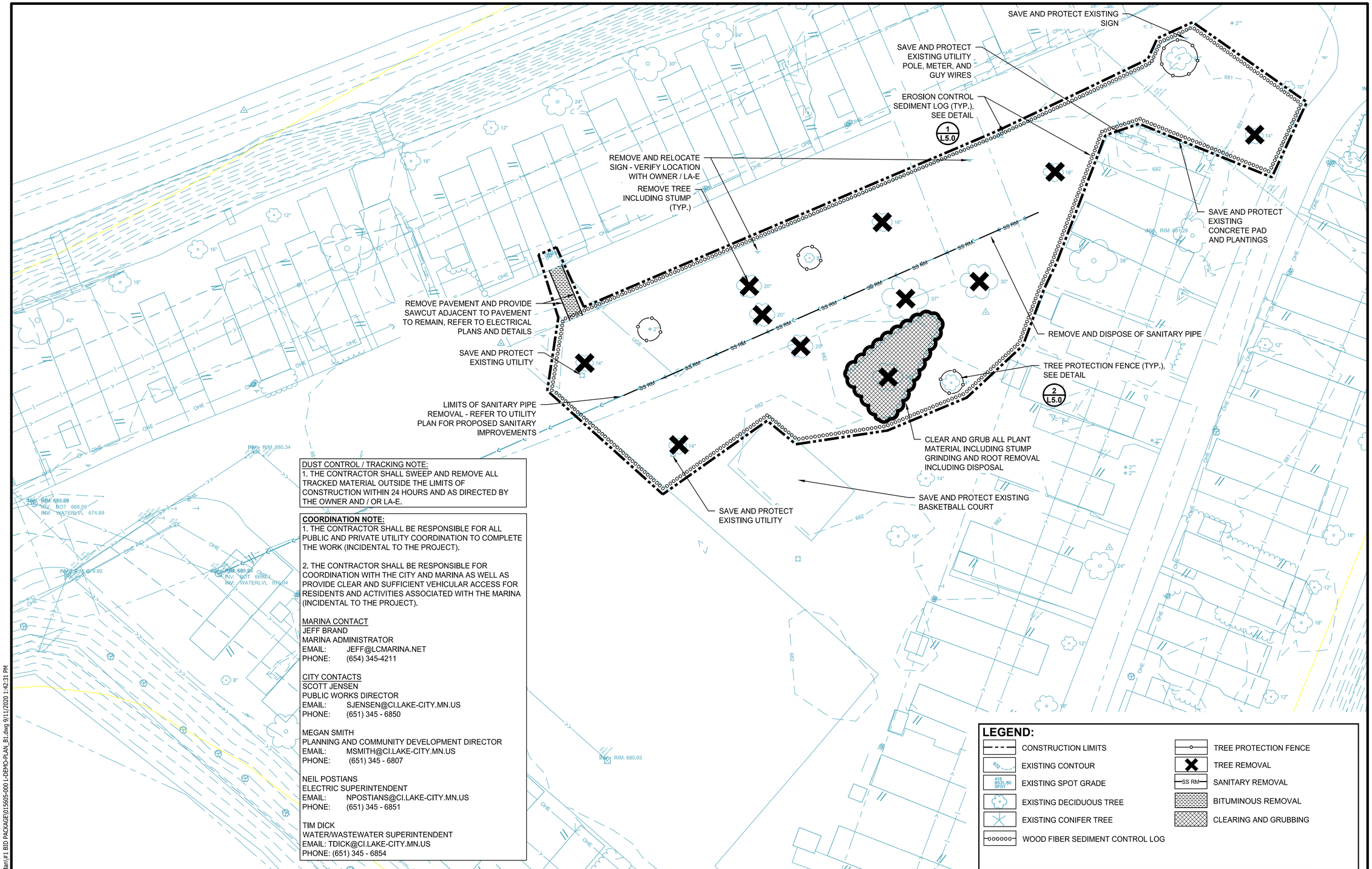

DUST CONTROL / TRACKING NOTE:
1. THE CONTRACTOR SHALL SWEEP AND REMOVE ALL TRACKED MATERIAL OUTSIDE THE LIMITS OF CONSTRUCTION WITHIN 24 HOURS AND AS DIRECTED BY THE OWNER AND / OR LA-E.

COORDINATION NOTE:
1. THE CONTRACTOR SHALL BE RESPONSIBLE FOR ALL PUBLIC AND PRIVATE UTILITY COORDINATION TO COMPLETE THE WORK (INCIDENTAL TO THE PROJECT).

2. THE CONTRACTOR SHALL BE RESPONSIBLE FOR COORDINATION WITH THE CITY AND MARINA AS WELL AS PROVIDE CLEAR AND SUFFICIENT VEHICULAR ACCESS FOR RESIDENTS AND ACTIVITIES ASSOCIATED WITH THE MARINA (INCIDENTAL TO THE PROJECT).

MARINA CONTACT
JEFF BRAND
MARINA ADMINISTRATOR
EMAIL: JEFF@LCMARINA.NET
PHONE: (654) 345-4211

CITY CONTACTS
SCOTT JENSEN
PUBLIC WORKS DIRECTOR
EMAIL: SJENSEN@CI.LAKE-CITY.MN.US
PHONE: (651) 345 - 6850

MEGAN SMITH
PLANNING AND COMMUNITY DEVELOPMENT DIRECTOR
EMAIL: MSMITH@CI.LAKE-CITY.MN.US
PHONE: (651) 345 - 6807

NEIL POSTIANS
ELECTRIC SUPERINTENDENT
EMAIL: NPOSTIANS@CI.LAKE-CITY.MN.US
PHONE: (651) 345 - 6851

TIM DICK
WATER/WASTEWATER SUPERINTENDENT
EMAIL: TDICK@CI.LAKE-CITY.MN.US
PHONE: (651) 345 - 6854

LEGEND:

- CONSTRUCTION LIMITS
- EXISTING CONTOUR
- EXISTING SPOT GRADE (416 SPOT 6531.80)
- EXISTING DECIDUOUS TREE
- EXISTING CONIFER TREE
- WOOD FIBER SEDIMENT CONTROL LOG
- TREE PROTECTION FENCE
- TREE REMOVAL
- SANITARY REMOVAL (SS RM)
- BITUMINOUS REMOVAL
- CLEARING AND GRUBBING

N

0 20 40
SCALE IN FEET

1 / L2.0 **OVERALL REMOVALS PLAN**

K:\015605-000\Cad\Plan\#1 BID PACKAGE\015605-000-L-DEMO-PLAN_B1.dwg 9/11/2020 1:42:31 PM

wsb

WSB PROJECT NO.: 015605-000

SCALE:	DESIGN BY:
AS SHOWN	JLA
PLAN BY:	CHECK BY:
SDF	JLA

REVISIONS

NO.	DATE	DESCRIPTION

I HEREBY CERTIFY THAT THIS PLAN, SPECIFICATION, OR REPORT WAS PREPARED BY ME OR UNDER MY DIRECT SUPERVISION AND THAT I AM A DULY LICENSED LANDSCAPE ARCHITECT UNDER THE LAWS OF THE STATE OF MINNESOTA.

STEVEN D. FOSS, PLA

DATE: 09/11/2020 LIC. NO. 56582

OHUTA BEACH PHASE I PROJECT

LAKE CITY, MN

REMOVALS

SHEET

L2.0

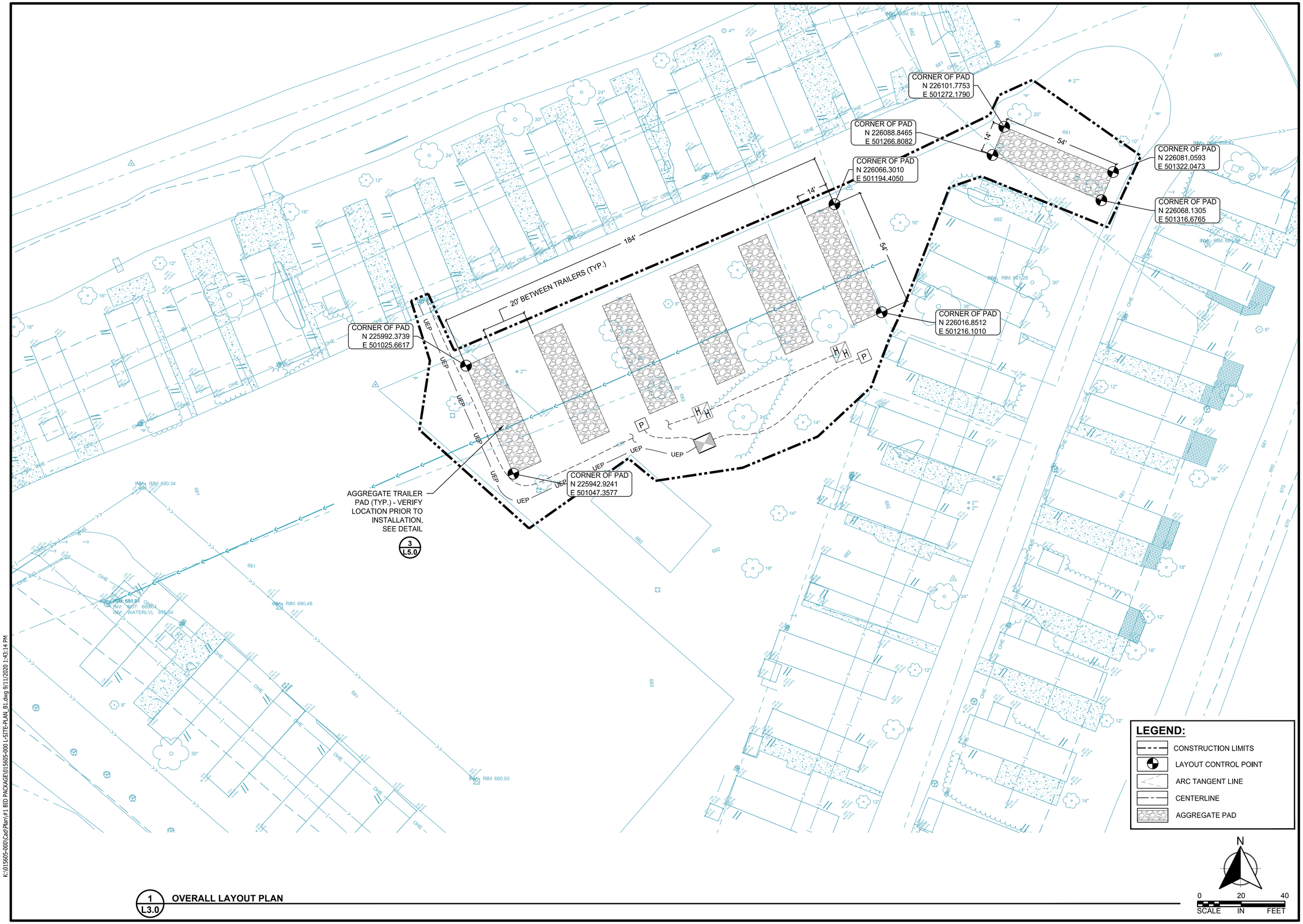

1
L3.0
OVERALL LAYOUT PLAN

K:\015605-000\Cad\Plan\#1 BID PACKAGE\015605-000 L-SITE-PLAN_B1.dwg 9/11/2020 1:43:14 PM

wsb

WSB PROJECT NO.:
015605-000

SCALE:	DESIGN BY:
AS SHOWN	JLA
PLAN BY:	CHECK BY:
SDF	JLA

REVISIONS

NO.	DATE	DESCRIPTION

I HEREBY CERTIFY THAT THIS PLAN, SPECIFICATION, OR REPORT WAS PREPARED BY ME OR UNDER MY DIRECT SUPERVISION AND THAT I AM A DULY LICENSED LANDSCAPE ARCHITECT UNDER THE LAWS OF THE STATE OF MINNESOTA.

STEVEN D. FOSS, PLA

DATE: 09/11/2020 LIC. NO: 56582

OHUTA BEACH PHASE I PROJECT

LAKE CITY, MN

OVERALL LAYOUT PLAN

SHEET

L3.0

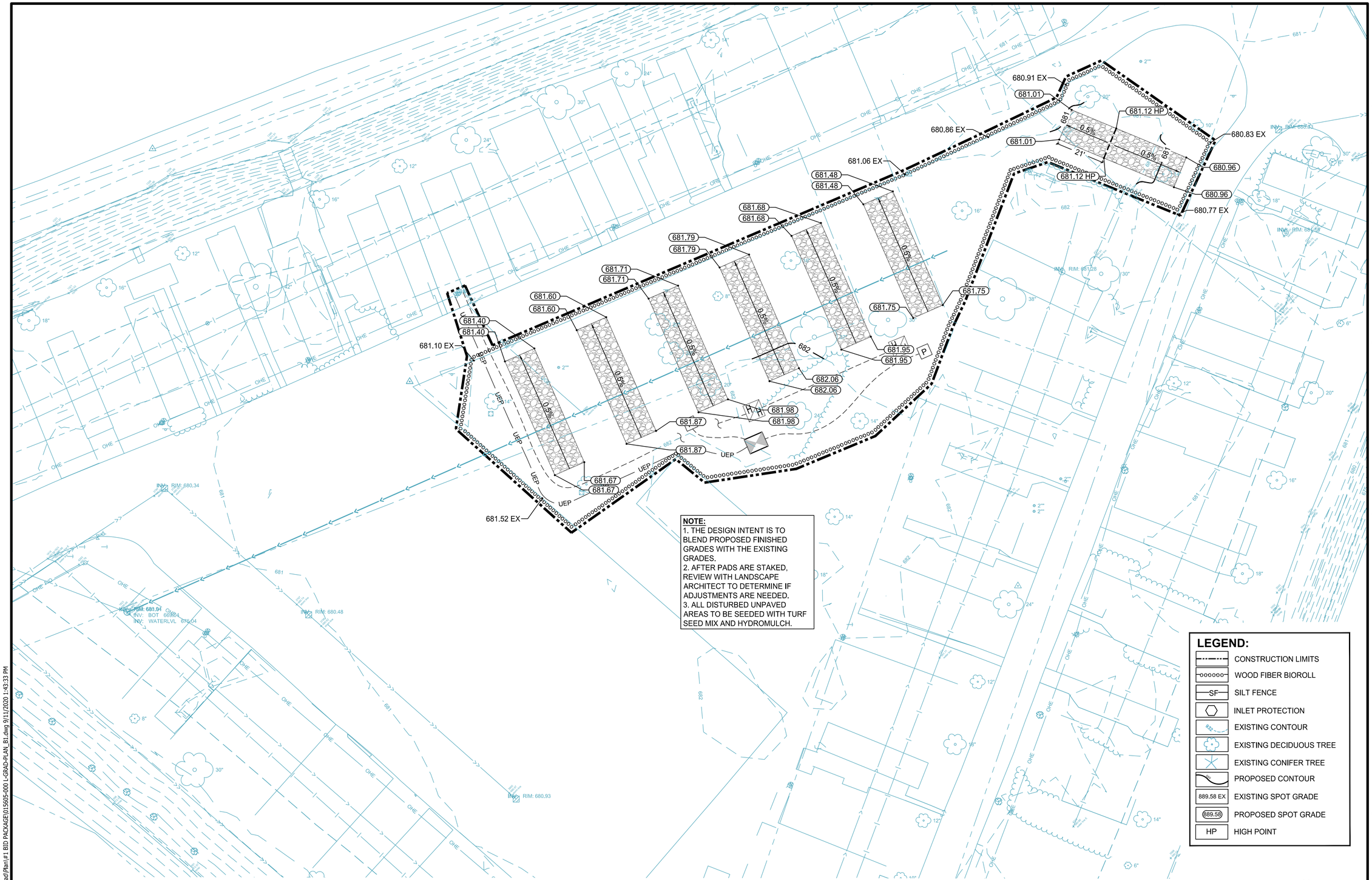

NOTE:
1. THE DESIGN INTENT IS TO BLEND PROPOSED FINISHED GRADES WITH THE EXISTING GRADES.
2. AFTER PADS ARE STAKED, REVIEW WITH LANDSCAPE ARCHITECT TO DETERMINE IF ADJUSTMENTS ARE NEEDED.
3. ALL DISTURBED UNPAVED AREAS TO BE SEEDED WITH TURF SEED MIX AND HYDROMULCH.

LEGEND:

	CONSTRUCTION LIMITS
	WOOD FIBER BIOROLL
SF	SILT FENCE
	INLET PROTECTION
880	EXISTING CONTOUR
	EXISTING DECIDUOUS TREE
	EXISTING CONIFER TREE
	PROPOSED CONTOUR
889.58 EX	EXISTING SPOT GRADE
889.58	PROPOSED SPOT GRADE
HP	HIGH POINT

N

0 20 40
SCALE IN FEET

1 / L4.0 **OVERALL GRADING & RESTORATION PLAN**

K:\015605-000\Cad\Plan\#1 BID PACKAGE\015605-000 L-GRAD-PLAN_B1.dwg 9/11/2020 1:43:33 PM

wsb

WSB PROJECT NO.: 015605-000

SCALE:	DESIGN BY:
AS SHOWN	JLA
PLAN BY:	CHECK BY:
SDF	JLA

REVISIONS

NO.	DATE	DESCRIPTION

I HEREBY CERTIFY THAT THIS PLAN, SPECIFICATION, OR REPORT WAS PREPARED BY ME OR UNDER MY DIRECT SUPERVISION AND THAT I AM A DULY LICENSED LANDSCAPE ARCHITECT UNDER THE LAWS OF THE STATE OF MINNESOTA.

STEVEN D. FOSS, PLA

DATE: 09/11/2020 LIC. NO: 56582

OHUTA BEACH PHASE I PROJECT

LAKE CITY, MN

GRADING & RESTORATION

SHEET

L4.0

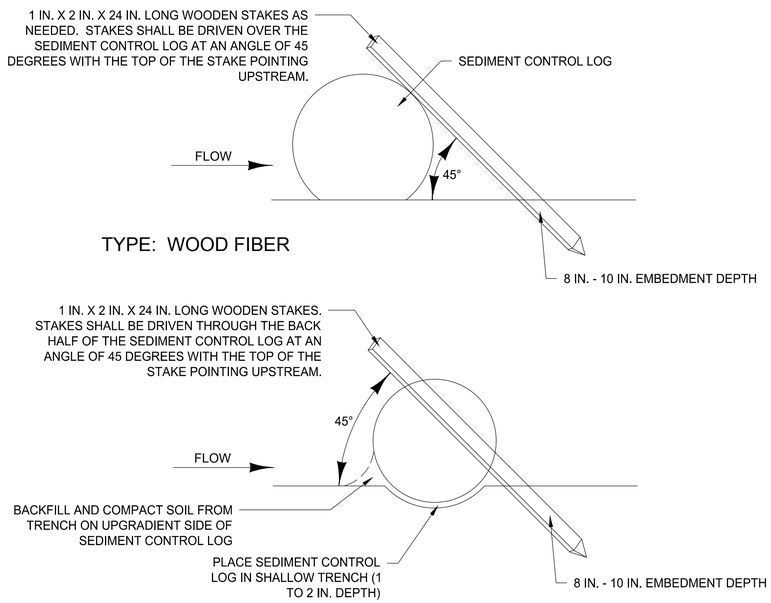

1 / L5.0 SEDIMENT CONTROL LOG DETAIL
SCALE: NTS

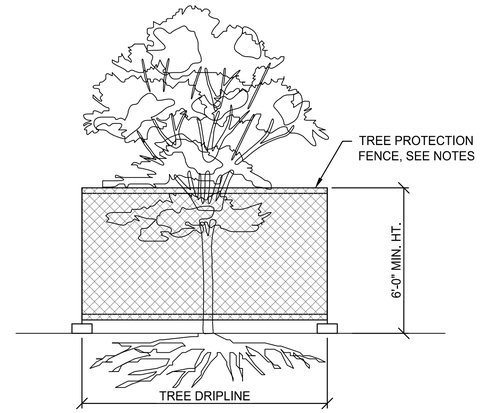

NOTES:
1. 6-FT. HIGH TEMPORARY CHAIN LINK FENCE SHALL BE PLACED AT THE DRIPLINE OF THE TREE TO BE SAVED. FENCE SHALL COMPLETELY ENCIRCLE THE TREE(S). INSTALL FENCE POSTS USING PIER BLOCKS ONLY. AVOID DRIVING POSTS OR STAKES INTO MAJOR ROOTS.
2. FOR ROOTS OVER 1-IN DIA. THAT ARE DAMAGED DURING CONSTRUCTION, MAKE A CLEAN, STRAIGHT CUT TO REMOVE THE DAMAGED PORTION. ALL EXPOSED ROOTS SHALL BE TEMPORARILY COVERED WITH DAMP BURLAP TO PREVENT DRYING, AND SHALL BE COVERED WITH SOIL AS SOON AS POSSIBLE.
3. WORK WITHIN PROTECTION FENCE SHALL BE DONE MANUALLY. NO STOCKPILING OF MATERIALS, VEHICULAR TRAFFIC, OR STORAGE OF EQUIPMENT OR MACHINERY SHALL BE ALLOWED WITHIN THE LIMIT OF THE FENCING.

2 / L5.0 TREE PROTECTION FENCE DETAIL
SCALE: NTS

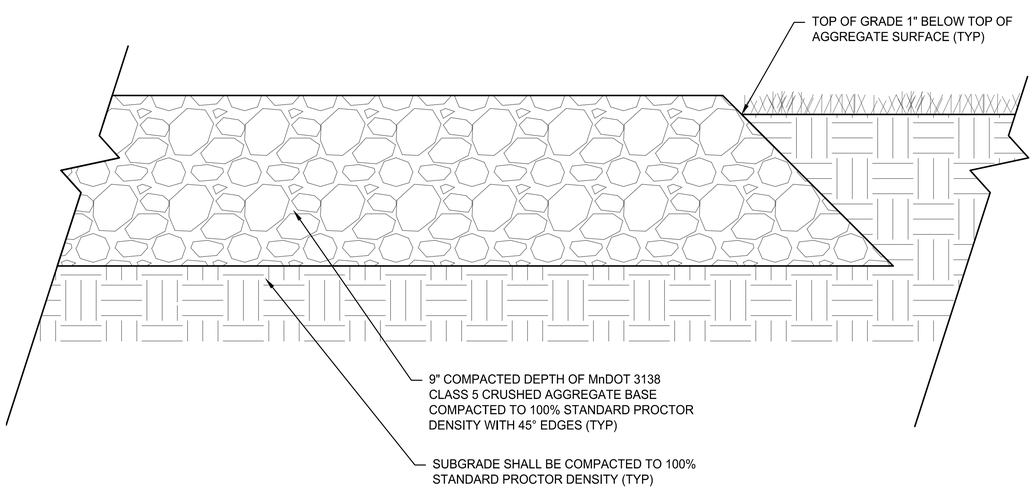

3 / L5.0 AGGREGATE TRAILER PAD DETAIL
SCALE: NTS

K:\015605-000\Cad\Plan\#1 BID PACKAGE\015605-000 L-DETL_B1.dwg 9/11/2020 1:44:02 PM

wsb

WSB PROJECT NO.: 015605-000

SCALE:	DESIGN BY:
AS SHOWN	JLA
PLAN BY:	CHECK BY:
SDF	JLA

REVISIONS

NO.	DATE	DESCRIPTION

I HEREBY CERTIFY THAT THIS PLAN, SPECIFICATION, OR REPORT WAS PREPARED BY ME OR UNDER MY DIRECT SUPERVISION AND THAT I AM A DULY LICENSED LANDSCAPE ARCHITECT UNDER THE LAWS OF THE STATE OF MINNESOTA.

STEVEN D. FOSS, PLA

DATE: 09/11/2020 LIC. NO: 56582

OHUTA BEACH PHASE I PROJECT

LAKE CITY, MN

EROSION AND PAVEMENT DETAILS

SHEET

L5.0

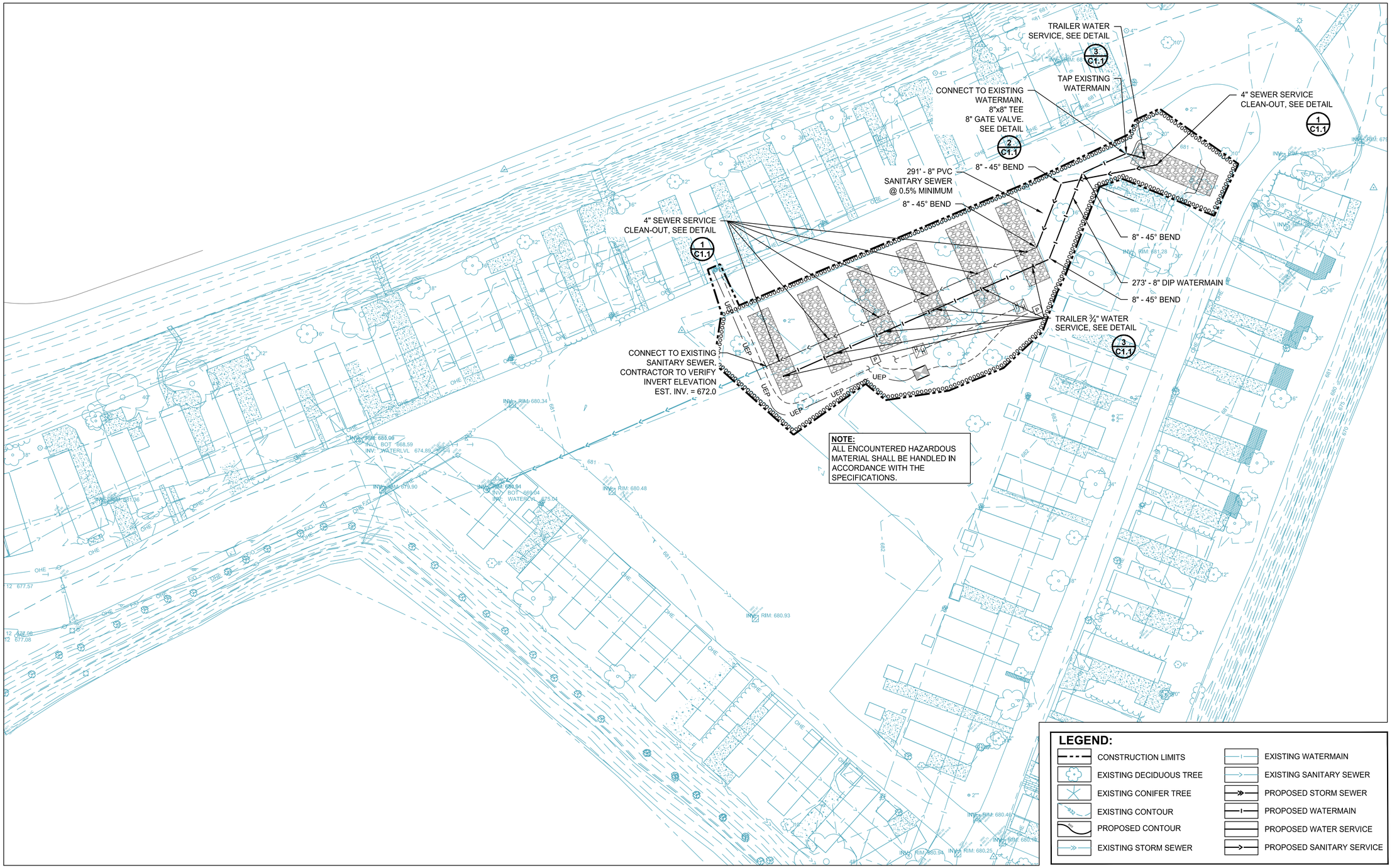

1 C1.0 **OVERALL UTILITY PLAN**

K:\015605-000\Cad\Plan\#1 BID PACKAGE\015605-000-C-UTIL-PLAN_B1.dwg 9/11/2020 1:44:18 PM

wsb

WSB PROJECT NO.: 015605-000

SCALE:	DESIGN BY:
AS SHOWN	JS
PLAN BY:	CHECK BY:
JS	JS

REVISIONS

NO.	DATE	DESCRIPTION

I HEREBY CERTIFY THAT THIS PLAN, SPECIFICATION, OR REPORT WAS PREPARED BY ME OR UNDER MY DIRECT SUPERVISION AND THAT I AM A DULY LICENSED PROFESSIONAL ENGINEER UNDER THE LAWS OF THE STATE OF MINNESOTA.

JAMES SOLTIS, PE

DATE: 09/11/2020 LIC. NO: 54823

OHUTA BEACH PHASE I PROJECT

LAKE CITY, MN

UTILITIES

SHEET

C1.0

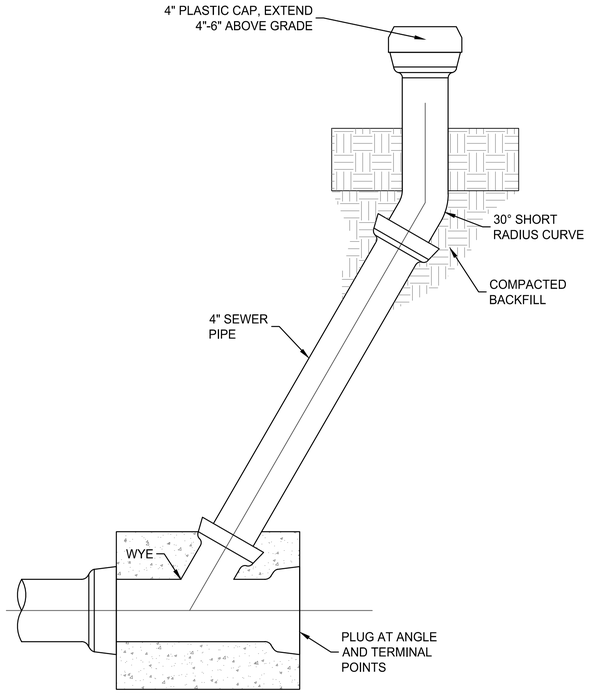

SECTION

1 C1.1 SANITARY SERVICE CLEANOUT
SCALE: NO SCALE

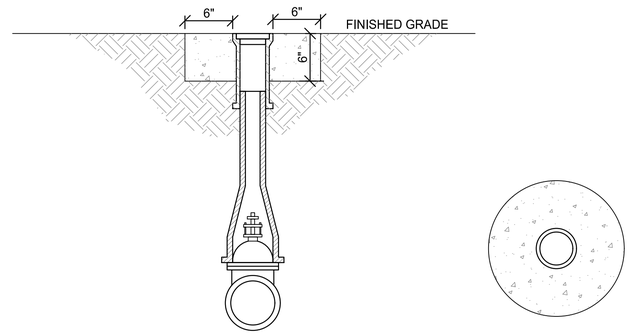

SECTION

PLAN

2 C1.1 WATER VALVE AND BOX
SCALE: NO SCALE

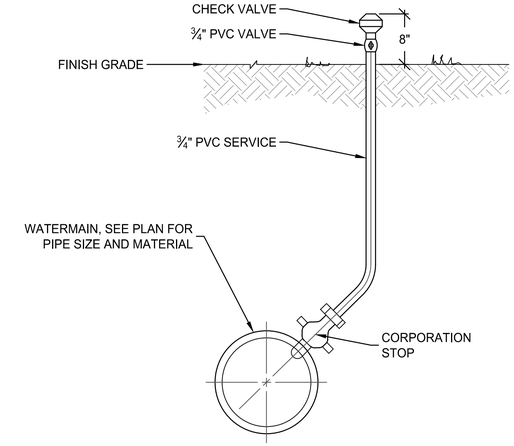

3 C1.1 CORP. STOP VALVE AND SERVICE
SCALE: NO SCALE

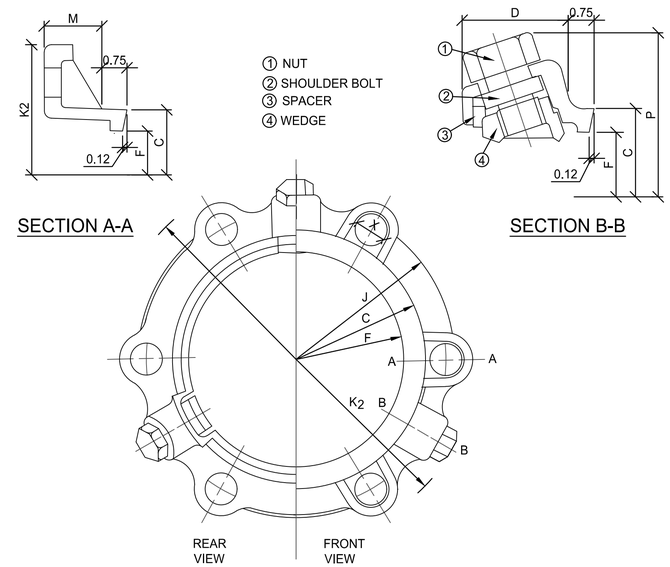

SECTION A-A

SECTION B-B

SERIES	C	D	F	J	M	X	NO. OF WEDGES	NO. OF BOLTS	P	P W/NUTS TWISTED OFF	K_2
1103	4.84	2.27	4.06	6.19	0.62	3/4	2	4	9.36	9.06	7.69
1104	5.92	2.27	4.90	7.50	0.75	7/8	2	4	10.20	9.90	9.12
1106	8.02	2.27	7.00	9.50	0.88	7/8	3	6	12.30	12.00	11.12
1108	10.17	2.31	9.15	11.75	1.00	7/8	4	6	14.45	14.15	13.37
1110	12.22	2.37	11.20	14.00	1.00	7/8	6	8	16.50	16.20	15.62
1112	14.32	2.37	13.30	16.25	1.25	7/8	8	8	18.60	18.30	17.88
1114	16.40	2.69	15.44	18.75	1.50	7/8	10	10	20.64	20.94	20.25
1116	18.50	2.69	17.54	21.00	1.56	7/8	12	12	22.60	22.90	24.75
1118	20.60	2.69	19.64	23.25	1.63	7/8	12	12	24.70	25.00	27.00
1120	22.70	2.69	21.74	25.50	1.69	7/8	14	14	26.80	27.10	31.30
1124	26.90	3.20	25.94	30.00	1.81	7/8	16	16	32.94	32.64	32.64
1130	33.29	3.20	32.17	36.88	2.25	1-1/8	20	20	39.17	38.87	39.12
1136	39.59	3.20	38.47	43.75	2.25	1-1/8	24	24	45.47	45.17	46.00
1142	45.79	4.56	44.67	50.62	3.88	1-3/8	28	28	55.87	55.57	53.48
1148	52.09	4.56	50.97	57.50	3.88	1-3/8	32	32	62.17	61.87	60.36

5 C1.1 MEGALUG SERIES 1100 MECHANICAL JOINT RESTRAINT
SCALE: NO SCALE

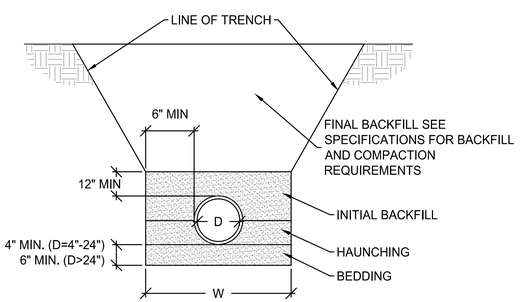

D	W
4"	21"
6"	23"
8"	26"
10"	28"
12"	31"
15"	34"
18"	39"
24"	48"

NOTES:

1. WHERE TRENCH BOTTOM IS UNSTABLE, THE CONTRACTOR SHALL EXCAVATE TO A DEPTH REQUIRED BY THE ENGINEER AND REPLACE WITH A FOUNDATION OF CLASS I OR II MATERIAL AS DEFINED IN ASTM D2321, LATEST EDITION
2. HAUNCHING AND INITIAL BACKFILL SHALL BE CLASS I, II OR III AND INSTALLED AS REQUIRED IN ASTM D2321, LATEST EDITION.
3. MINIMUM COVER = 12" TO FINISH GRADE SURFACE MOUND AND COMPACT TO 48" COVER DURING CONSTRUCTION

4 C1.1 PVC/HDPE PIPE BEDDING
SCALE: NO SCALE

K:\015605-000\Cad\Plan\#1 BID PACKAGE\015605-000 C-UTIL-PLAN_B1.dwg 9/11/2020 1:44:28 PM

wsb

WSB PROJECT NO.:
015605-000

SCALE:	DESIGN BY:
AS SHOWN	JS
PLAN BY:	CHECK BY:
JS	JS

REVISIONS

NO.	DATE	DESCRIPTION

I HEREBY CERTIFY THAT THIS PLAN, SPECIFICATION, OR REPORT WAS PREPARED BY ME OR UNDER MY DIRECT SUPERVISION AND THAT I AM A DULY LICENSED PROFESSIONAL ENGINEER UNDER THE LAWS OF THE STATE OF MINNESOTA.

JAMES SOLTIS, PE

DATE: 09/11/2020 LIC. NO.: 54823

OHUTA BEACH PHASE I PROJECT

LAKE CITY, MN

UTILITIES

SHEET

C1.1

OHUTA BEACH
PHASE 1 PROJECT

LAKE CITY, MINNESOTA

ELECTRICAL DRAWINGS

SITE LOCATION

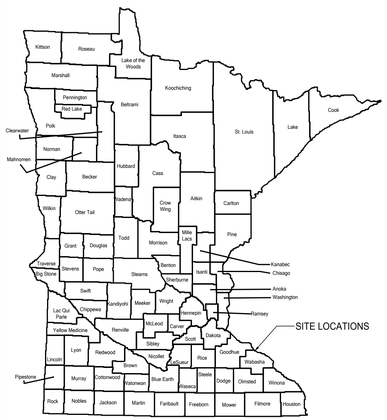

NOT TO SCALE

ELECTRICAL SYMBOL LEGEND

SYMBOL	LIGHTING SYSTEM
	SURFACE, BOLLARD LIGHT FIXTURE
	RECESSED LIGHT FIXTURE
	WALL LIGHT FIXTURE
	FLOOD LIGHT
	LIGHTING TRACK W/ FIXTURE HEADS
	POLE MOUNTED

SYMBOL	POWER AND SWITCHING SYSTEMS
	WEATHER PROOF GROUND FAULT INTERRUPTING RECEPTACLE
	SPECIAL PURPOSE RECEPT. AS NOTED ON DWGS.
	PHOTO SENSOR
	DIMMER OR DIMMER CONTROL
	PUSH BUTTON
	SINGLE POLE SWITCH
P	POWER PEDESTAL

SYMBOL	EQUIPMENT SYSTEMS
	BRANCH CIRCUIT PANELS (250V OR LESS)
	BRANCH CIRCUIT PANELS (277/480V)
	DISTRIBUTION PANEL OR SWITCHBOARD
	SWITCHBOARD MAIN
	DRY TYPE TRANSFORMER - SIZE AS NOTED ON DRAWING
	DISCONNECT SWITCH
	MAGNETIC MOTOR STARTER
	DISCONNECT SWITCH & MAGNETIC MOTOR STARTER IN SAME LOCATION
	AUXILIARY EQUIPMENT (AS NOTED)
3 3	JUNCTION BOX
MH	MANHOLE
HH	HAND HOLE
	GOUNDING SYSTEM BUS BAR

SYMBOL	WIRING SYSTEMS
#10	INDICATES WIRE SIZE. IF NOT NOTED #12 AWG CONDUCTORS SHALL BE USED
	HOME RUN
	NOTE: ANY CIRCUITS WITHOUT FURTHER DESIGNATION IS A TWO WIRE CIRCUIT. A GREATER NUMBER OF WIRES ARE INDICATED BY CROSS MARKS
LP-1/3	PANELBOARD/CIRCUIT NUMBER
A H1/12	FIXTURE TYPE; SPORTS LIGHTING ASSEMBLY; PANEL NAME; CIRCUIT NUMBER
	GROUNDING CONDUCTOR; HOT CONDUCTOR; NEUTRAL CONDUCTOR
	CONDUIT CAPPED OR BUSHED
	CONDUIT CONTINUATION
	BRANCH CIRCUIT (UNDER FLOOR OR UNDER GROUND)
	GROUND

SYMBOL	MISC. DEVICES
2	INDICATES NOTE ON PLAN
4	RELAY NUMBER
	MECHANICAL EQUIPMENT CROSS REFERENCE (NO. REFERS TO SCHEDULE).

LINETYPE LEGEND	
	NEW FIXTURE
	EXISTING FIXTURE TO BE REMOVED
	EXISTING FIXTURE TO REMAIN OR BE REUSED
	NEW DEVICE
	EXISTING DEVICE TO BE REMOVED
	EXISTING DEVICE TO REMAIN OR BE REUSED
	NEW DEVICE
	EXISTING DEVICE TO BE REMOVED
	EXISTING DEVICE TO REMAIN OR BE REUSED

ELECTRICAL ABBREVIATIONS

A,C	ALTERNATING CURRENT
AC	ABOVE COUNTER
AFF	ABOVE FINISH FLOOR
AMP	AMPERE
ARCH	ARCHITECTURAL
ASC	ADJUSTABLE SPEED CONTROLLER
ATS	AUTOMATIC TRANSFER SWITCH
AUTO	AUTOMATIC
AWG	AMERICAN WIRE GAUGE
BC	BELOW COUNTER
BRKR	BREAKER
BSMT	BASEMENT
C	CONDUIT, CABLE
CAB	CABINTET
CAP	CAPACITOR
CB	CIRCUIT BREAKER
CCT	CIRCUIT
CCTV	CLOSED CIRCUIT TELEVISION
CLG	CEILING
CON	CONSOLE TELEPHONE
CP	CHILDPROOF
CPT	CONTROL POWER TRASFORMER
CR & SA	COMO RESEARCH & SERVICE
CT	CURRENT TRANSFORMER
CU	COPPER
D	DESK MOUNDED
DISC	DISCONNECT
DISTR	DISTRIBUTION
DPDT	DOUBLE POLE, DOUBLE THROW
DPST	DOUBLE POLE, SINGLE THROW
DWG	DRAWING
EA	EACH
ELEC	ELECTRIC/ELECTRICAL
EMERG	EMERGENCY
EMS	ENERGY MANAGEMENT SYSTEM
EP	ELECTRICAL PNEUMATIC VALVE
EXIST	EXISTING
EWC	ELECTRIC WATER COOLER
EWH	ELECTRIC WATER HEATER
F	FUSED (D)
FA	FIRE ALARM
FAAP	FIRE ALARM ANNUNCIATOR PANEL
FC	FUSED CONTACT
FACP	FIRE ALARM CONTROL PANEL
FIXT	FIXTURE
FL	FLUSH
FLOUR	FLUORESCENT
FS	FUSED SWITCH
F-STAT	FREEZE STAT
GEN	GENERATOR
GB	GROUND BUS
GFI	GROUND FAULT INTERRUPTING
GND	GROUND
GYP	GYPSUM BOARD
HDCP	HANDICAPPED
HTR	HEATER
H-O-A	HAND-OFF-AUTOMATIC
HH	HAND HOLE
HP	HORSEPOWER
HT	HEIGHT
HZ	HERTZ
IMC	INTERMEDIATE METALLIC CONDUIT
INCAND	INCANDESCENT
JB	JUNCTION BOX
JCT	JUNCTION

KCMIL	THOUSAND CIRCULAR MILS
KV	KILOVOLT
KVA	KILOVOLT AMPERE
KVAR	KILOVOLT AMPERE REACTIVE
KW	KILOWATT
LA	LIGHTING ARRESTOR
LTG	LIGHTING
MCC	MOTOR CONTROL CENTER
MCM	THOUSAND CIRCULAR MILS
MECH	MECHANICAL
MEZZ	MEZZANINE
MFR	MANUFACTURE
MH	MAN HOLE
ML	MULTILINE
MLO	MAIN LUGS ONLY
MMS	MANUAL MOTOR SWITCH (OVERLOADS)
MS	MOTOR SWITCH
MS & P	MOTOR SWITCH & PILOT
MTD	MOUNTED
MTG	MOUNTING
MTR	MOTOR
MTRS	MOTORS
NC	NORMALLY CLOSED
NEU	NEUTRAL
NF	NON-FUSED
NIC	NOT IN CONTRACT
NL	NIGHT LIGHT
NO	NORMALLY OPEN
NTS	NOT TO SCALE
OC	ON CENTER
P	POLE
PA	PUBLIC ADDRESS SYSTEM
PE SWITCH	PNEUMATIC ELECTRIC
PF	POWER FACTOR
PH(~)	PHASE
PNL	PANEL
PP	POWER POLE
PVC	POLYVINYL CHLORIDE
PWR	POWER
QTY	QUANTITY
REC	RECESSED
RM	ROOM
RL	RELOCATE
S	SURGE SUPPRESSION RECEPTACLE
SHT	SHEET
SPEC	SPECIFICATION
SPKR	SPEAKER
SPST	SINGLE POLE, SINGLE THROW
SW	SWITCH
SWBD	SWITCHBOARD
SV	SOLENOID VALVE
SYS	SYSTEM
TEL	TELEPHONE
TERM	TERMINAL
TFMR(T)	TRANSFORMER
T-STAT	THERMOSTAT
TV	TELEVISION
TYP	TYPICAL
W	WATT
W/	WITH
W/O	WITHOUT
WP	WEATHERPROOF
UEP	UNDERGROUND ELECTRIC PRIMARY
UES	UNDERGROUND ELECTRIC SECONDARY
V	VOLT
VA	VOLT AMPERE
VM	VOLTMETER
VS	VOLTMETER SWITCH
X	EXISTING
XC	EXISTING DEVICE TO BE REMOVED
XFMR	TRANSFORMER
XR	EXISTING TO BE RELOCATED

GENERAL NOTES

1. BRANCH CIRCUIT DESIGNATIONS AS INDICATED ON THESE DRAWINGS ARE FOR CLARIFICATION ONLY AND DO NOT REPRESENT EXACT CIRCUIT DESIGNATIONS IN THE PANELS SERVING THE REMODELED AREA. EXACT LOCATIONS AND/OR DESIGNATIONS SHALL BE ADJUSTED AS REQUIRED TO PROVIDE BALANCED LOADING OF ALL THE PHASES IN THE PANEL.
2. ALL FIXTURES INDICATED FOR NIGHT LIGHTING FUNCTION SHALL BE CONNECTED TO THE CONTINUOUSLY ENERGIZED PORTION OF THE ROOM LIGHTING BRANCH CIRCUIT.
3. VERIFY LOCATION OF ALL MOTORS WITH MECHANICAL SUBCONTRACTOR PRIOR TO ROUGH-IN.
4. INSTALLATION OF ALL FIXTURES SHALL COMPLY WITH ALL INTERNATIONAL BUILDING CODE REQUIREMENTS.
5. WHEREVER THE INSTALLATION OF ELECTRICAL EQUIPMENT CONFLICTS WITH EXISTING CONDITIONS NOT SHOWN ON THE PLANS OR SPECIFICATIONS, THE CONTRACTOR SHALL DETERMINE A SATISFACTORY ALTERNATIVE MEANS FOR INSTALLATION AND VERIFY IT WITH THE ENGINEER PRIOR TO INSTALLATION.
6. WHERE ELECTRICAL DEVICES ARE LOCATED ADJACENT TO LIGHT SWITCHES, MOUNT ALL DEVICES AT THE SAME ELEVATION. OR LINE OF PLUMB.
7. ALL LIGHTING FIXTURES LOCATED IN A FIRE RATED CEILING SHALL BE ENCLOSED OR SURROUNDED IN A FIRE PROTECTION MATERIAL. PROTECTION MATERIAL SHALL BE INSTALLED PER FIRE RESISTANCE INDEX. VERIFY WITH THE ARCHITECTURAL DRAWINGS AS TO THE WALL AND CEILING RATINGS.
8. FINAL CONNECTIONS TO EQUIPMENT SHALL BE PER MANUFACTURERS APPROVED WIRING DIAGRAMS, DETAILS AND INSTRUCTIONS. IT SHALL BE THE CONTRACTORS RESPONSIBILITY TO PROVIDE MATERIALS AND EQUIPMENT COMPATIBLE WITH EQUIPMENT ACTUALLY SUPPLIED.

INDEX TO ELECTRICAL SHEETS

E0.1 ELECTRICAL TITLE SHEET

E1.1 SITE PLAN - ELECTRICAL

E2.1 ELECTRICAL - DETAILS

edi-dolejs
consulting engineers
minneapolis | mankato
1112 North 5th Street Minneapolis, MN 55411 (612) 343-5965
1624 North Riverfront Drive Mankato, MN 56001 (507) 625-7869

wsb
WSB PROJECT NO.: 015605-000

SCALE:	DESIGN BY:
AS SHOWN	LDB
PLAN BY:	CHECK BY:
LLA	LDB

REVISIONS

NO.	DATE	DESCRIPTION

I HEREBY CERTIFY THAT THIS PLAN, SPECIFICATION, OR REPORT WAS PREPARED BY ME OR UNDER MY DIRECT SUPERVISION AND THAT I AM A DULY LICENSED PROFESSIONAL ENGINEER UNDER THE LAWS OF THE STATE OF MINNESOTA.

JAY S. HRUBY P.E.

DATE: 09/11/2020 LIC. NO: 40290

OHUTA BEACH PHASE 1 PROJECT

LAKE CITY

TITLE SHEET
ELECTRICAL

C.P. XXXXXXX

SHEET E0.1

EDI-DOLEJS #20-046

P:\20-046 - Lake City - Ohuta Beach\1-Design\1-Electrical\Drawings\PHASE 1\E0-1.dwg 9/10/2020 3:31:38 PM

PLAN NOTES:

1. UTILITY PAD MOUNTED TRANSFORMER TO BE INSTALLED ON CONTRACTOR FURNISHED CONCRETE PAD. SEE DETAIL 3/E3.1 FOR PAD DETAILS. PAD TO BE ELEVATED TO DATUM POINT 683.9 APPROXIMATELY 2-FEET ABOVE EXISTING LEVEL. COORDINATE WITH UTILITY FOR FURTHER DETAILS AND CONDUIT LOCATIONS IN PAD.
2. CONTRACTOR TO FURNISH AND INSTALL ONE (1) 3" PVC CONDUIT UNDERGROUND AND UP POLE FOR INSTALLATION OF UTILITY PRIMARY CABLE. SEE DETAIL 2/E3.1 FOR TRENCH DETAILS.
3. FURNISH AND INSTALL A SERVICE ENTRANCE METERING PEDESTAL 22KA AIC RATING WITH FOUR (4) METER SOCKETS FOR SERVICE FEEDS EACH WITH A 200-AMP MAIN BREAKER. UNIT TO BE POST MOUNTED. UNIT TO BE SIMILAR TO MIDWEST MH420B0 WITH P2 POST GRAY. PROVIDE A MAIN GROUND AT EACH PEDESTAL. REFER TO DETAIL 1/E3.1 FOR MORE DETAILS.
4. PROVIDE NEW 200-AMP 240/120-VOLT, 3-WIRE UNDERGROUND CIRCUIT FEED FROM NEW UTILITY INSTALLED PAD MOUNTED TRANSFORMER. UTILIZE THREE (3) 3/0 AWG PLUS #2 AWG GROUND IN 2-1/2" PVC CONDUIT COORDINATE WITH UTILITY.
5. PROVIDE 2" CONDUIT FROM BOTTOM OF POLE TO MANHOLES AS SHOWN FOR COMMUNICATION/DATA CIRCUITS. TERMINATE IN HANDHOLE TYPE QUAZITE #PC1324BA24 OR EQUAL COMPLETE WITH BOLTED COVER AND "COMMUNICATIONS" LOGO SUITABLE FOR OFF ROAD APPLICATIONS.

1 SITE PLAN - ELECTRICAL
SCALE: 1" = 40'-0"

GRAPHIC SCALE 0 40'

NORTH

edi-dolejs consulting engineers
minneapolis | mankato
1112 North 5th Street Minneapolis, MN 55411 (612) 343-5965
1624 North Riverfront Drive Mankato, MN 56001 (507) 625-7869

P:\20-046 - Lake City - Ohuta Beach\1-Design\1-Electrical\Drawings\PHASE 1\E1-1.dwg 9/11/2020 10:35:50 AM

wsb

WSB PROJECT NO.: 015605-000

SCALE:	DESIGN BY:
AS SHOWN	LDB
PLAN BY:	CHECK BY:
LLA	LDB

REVISIONS

NO.	DATE	DESCRIPTION

I HEREBY CERTIFY THAT THIS PLAN, SPECIFICATION, OR REPORT WAS PREPARED BY ME OR UNDER MY DIRECT SUPERVISION AND THAT I AM A DULY LICENSED PROFESSIONAL ENGINEER UNDER THE LAWS OF THE STATE OF MINNESOTA.

JAY S. HRUBY P.E.

DATE: 09/11/2020 LIC. NO: 40290

OHUTA BEACH PHASE 1 PROJECT

LAKE CITY

SITE PLAN ELECTRICAL

C.P. XXXXXXX

SHEET E1.1

EDI-DOLEJS #20-046

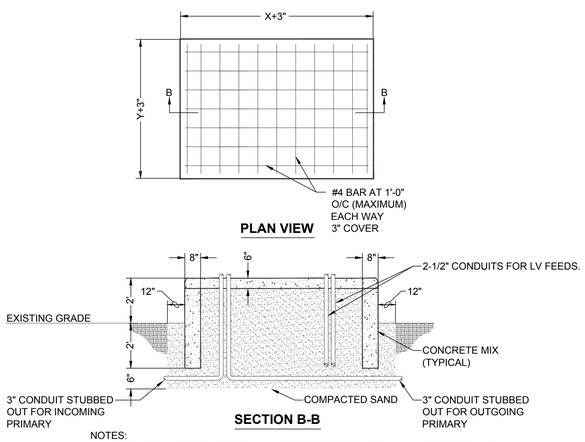

NOTES:

1. AIR ENTRAINED CONCRETE - 4000 PSI AFTER 28 DAYS, MAX. AGGREGATE 3/4".
2. STEEL FLOAT FINISH.
3. REINFORCEMENT: TYPE ASTM A775 EPOXY COATED REBAR A.S.T.M. GRADE 60.
4. ALL REINFORCING TO BE #4 BAR 12" O.C. EACH WAY. WIRE TIE ALL CROSSINGS.
5. IF THE ANTICIPATED FORECAST TEMPERATURE IS 35 DEGREES F OR LESS, THE PAD WILL BE INSULATED WITH EITHER BLANKETS OR POLY AND STRAW FOR A MIN. OF 3 DAYS.
6. APPLY MEMBRANE CURING COMPOUND.
7. EDGE TROWEL WITH CHAMFERED OUTSIDE EDGES.
8. DIMENSIONS X/Y REPRESENT EQUIPMENT FOOT PRINT DIMENSIONS.

3 TRANSFORMER PAD DETAIL

SCALE: NTS

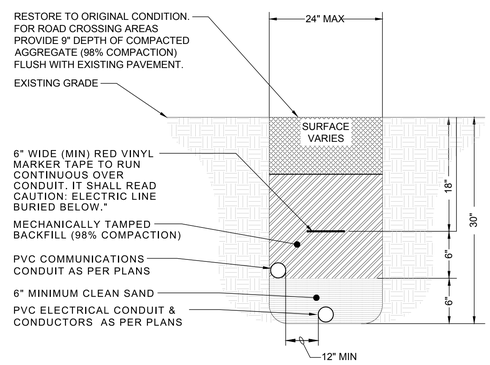

2 TRENCH DETAIL

SCALE: NTS

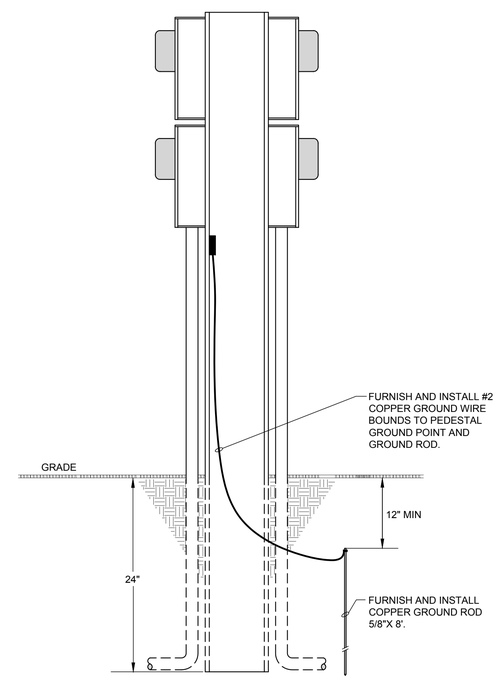

1 SERVICE PEDESTAL DETAIL

SCALE: NTS

wsb

WSB PROJECT NO.: 015605-000

SCALE:	DESIGN BY:
AS SHOWN	LDB
PLAN BY:	CHECK BY:
LLA	LDB

REVISIONS

NO.	DATE	DESCRIPTION

I HEREBY CERTIFY THAT THIS PLAN, SPECIFICATION, OR REPORT WAS PREPARED BY ME OR UNDER MY DIRECT SUPERVISION AND THAT I AM A DULY LICENSED PROFESSIONAL ENGINEER UNDER THE LAWS OF THE STATE OF MINNESOTA.

JAY S. HRUBY P.E.

DATE: 09/11/2020 LIC. NO: 40290

OHUTA BEACH PHASE 1 PROJECT

LAKE CITY

ELECTRICAL - DETAILS

C.P. XXXXXXX

SHEET E2.1

EDI-DOLEJS #20-046

edi-dolejs consulting engineers
minneapolis | mankato
1112 North 5th Street Minneapolis, MN 55411 (612) 343-5965
1624 North Riverfront Drive Mankato, MN 56001 (507) 625-7869

P:\20-046 - Lake City - Ohuta Beach\1-Design\1-Electrical\Drawings\PHASE 1\E2-1.dwg 9/10/2020 3:32:10 PM

ATTACHMENT 2

Best Management Practices for the Off-Site Reuse of Unregulated Fill

Remediation Division

This document defines **unregulated fill** and provides guidance from the Minnesota Pollution Control Agency (MPCA) Remediation Division regarding Best Management Practices for its off-site reuse.

Off-site reuse of excess soil as fill or aggregate is a common practice at many development and road construction projects. If no known or potential sources of contamination are identified during environmental due diligence and subsequent field observations, then sampling of excess soil for laboratory analysis is not necessary. However, when excess soil originates from a site with known or potential sources of contamination, characterization of the soil is warranted prior to off-site reuse in order to ensure the protection of public health and the environment.

If contamination is detected in the soil, the unregulated fill criteria and best management practices described herein provide a framework for making good decisions about the off-site reuse of the soil. If the soil does not meet the criteria for unregulated fill, the soil should be managed or disposed of in accordance with applicable regulations.

Definition of unregulated fill

Unregulated fill, for the purpose of this guidance, is defined as excess soil in which a release of contaminants has been identified at concentrations less than the MPCA's most conservative risk-based values (see complete criteria on the next page). Thus, the identified contaminants in the fill are present at concentrations that are not of regulatory concern to the MPCA. Unregulated fill is not a solid waste.*

Exclusions

1. Some excess soil and other material generated at a redevelopment site is regulated as either solid or hazardous waste and must be managed according to applicable solid or hazardous waste laws, including:
   - Soil that is characteristically hazardous or contaminated due to a release of a listed hazardous waste, as defined in Minn. R. ch. 7045. Such soil must be managed in accordance with the requirements of the MPCA's Resource Conservation and Recovery Act (RCRA) program.
   - Waste material such as salvaged bituminous, crushed concrete, bricks, fly ash, etc. proposed to be reused as fill. The beneficial reuse of solid wastes is governed by Minn. R. 7035.2860. Information regarding the beneficial reuse of solid wastes can be found on the MPCA's website at http://www.pca.state.mn.us/waste/sw-utilization.html.
2. The management and reuse of dredged material may be regulated by permit or subject to other regulations. Information about the management of dredged materials can be found on the MPCA's website at http://www.pca.state.mn.us/water/dredgedmaterials.html.

**If sent to a permitted landfill for disposal, unregulated fill may be subject to a solid waste tax.*

Criteria for unregulated fill

Unregulated fill is excess soil that meets all of the following field screening and contaminant concentration criteria:

- free from solid waste, debris, asbestos-containing material, visual staining, and chemical odor
- organic vapors less than 10 parts per million, as measured by a photoionization detector (PID)
- for petroleum-impacted soil, less than 100 mg/kg diesel range organics (DRO)/gasoline range organics (GRO)
- for contaminants detected in soil, less than the MPCA's Residential Soil Reference Values (SRVs) and Tier 1 Soil Leaching Values (SLVs)*

**Naturally-occurring concentrations of some metals, such as arsenic, selenium, or copper, sometimes exceed the SRV or SLV. Such soils are not considered impacted in the absence of a contaminant source or other field or laboratory indications of contamination.*

A list of current SRVs can be found in the MPCA's Risk-Based Guidance for the Soil-Human Health Pathway. A list of current SLVs can be found in the Risk-Based Guidance for Evaluating the Soil Leaching Pathway. Both documents can be found at http://www.pca.state.mn.us/cleanup/riskbasedoc.html. For contaminants detected in soil that do not have established SRVs or SLVs, additional evaluation may be needed to determine whether the soil can be considered unregulated fill.

Some detections of DRO in soil may stem from the presence of natural organic material or non-petroleum contaminants in the soil, such as coal tars or other material containing polynuclear aromatic hydrocarbons (PAHs). Evaluation of DRO data should take into consideration the history of the property, including the known or likely presence of a petroleum source, the presence (or lack thereof) of other contaminants in the soil sample, and the type of soil. If positive DRO results are related to non-petroleum contaminants, risk-based criteria for the non-petroleum contaminants should be applied. If necessary, laboratory analytical methods are available to help determine if the DRO is from natural organic material in the soil.

Placement of unregulated fill

To avoid potential problems or public concern stemming from the placement of unregulated fill in sensitive settings, the MPCA recommends the following Best Management Practices:

- Avoid placing unregulated fill at schools, playgrounds, daycares, and residential properties. Unregulated fill is most suitable for use at industrial or commercial properties.
- Avoid placing unregulated fill in gardens where food for human/animal ingestion will be grown.
- Observe a minimum ten-foot separation distance between unregulated fill and the water table.
- Avoid placing unregulated fill where contaminants may be transported by run-off to lakes, rivers, wetlands, or streams.

Sampling decisions

Decisions of whether to sample soil for contamination prior to off-site reuse should be based on the history of the source area, the nature of the source material, the extent to which the soil has been previously characterized, and other factors that are part of a due diligence assessment of the environmental condition of the source property.

If the soil originates from a site where known or potential sources of contamination are present, samples of the soil should be collected for field screening and laboratory analyses. Examples of sites where environmental due diligence may reveal known or potential sources of contamination include sites where contamination was previously identified as a result of regulatory action or voluntary

investigation, previously developed sites (commercial, industrial, recreational, or residential), agricultural properties, or land that may have been subject to dumping, spills, or historic filling activities.

If no known or potential sources of contamination are identified during environmental due diligence and subsequent field observations, then sampling of excess soil for laboratory analyses is not necessary.

Sample type and frequency

When soil sampling is appropriate, the frequency and type of samples should be based on the potential sources of contamination, the depth, volume, and heterogeneity of the source material, and the availability of existing data. At a minimum, analytical parameters should include volatile organic compounds, PAHs, RCRA metals, DRO, and GRO. Other contaminants of concern should be included as appropriate, based on the history of the source location. Analytical data should be age-appropriate and representative of the source material.

Some soils even lightly impacted by heavy metals have the potential to leach at concentrations at or above the Toxicity Characteristic Leaching Procedure (TCLP) regulatory limit. As a rule-of-thumb, a TCLP analysis for RCRA metals should be conducted if the soil concentration of a metal is 20 times or greater the TCLP regulatory criteria.

A typical frequency for the field screening of potentially contaminated soil using a PID is one measurement for every ten cubic yards of soil. For analytical samples, the stockpile sampling guidance presented in Section 7.3 of the MPCA's Site Characterization and Sampling Document can be used as a frame of reference for the appropriate sampling frequency based on soil volume: http://www.pca.state.mn.us/cleanup/pubs/sitechar.pdf. Soil sampling guidelines for the Petroleum Remediation Program are presented in guidance Document 4-04: http://www.pca.state.mn.us/publications/c-prp4-04.pdf. Flexibility in the number of samples may be warranted, depending on the site-specific circumstances. Sound professional judgment, taking into account all of the factors discussed above, should be used when developing a sampling plan to determine whether excess soil meets the criteria for unregulated fill.

Implementation

All parties are encouraged to use the best management practices described herein in order to make good decisions about the off-site reuse of unregulated fill. It is the responsibility of the property owners and other parties engaged in development and construction activities to make sure that their activities include appropriate environmental due diligence and that excess soil and other materials generated by these activities are managed in an environmentally responsible manner.

Note that some local units of government, including Dakota County, may have local ordinances which restrict the off-site reuse of unregulated fill within their boundaries. Parties seeking to import unregulated fill should check with local regulators to determine if such ordinances are in effect in their project area.

Nothing in this guidance excuses anyone from compliance with any law, rule, or other legal obligation (including any environmental covenant) that applies to any development or construction activity, including the generation, management, transport, and reuse of excess soil.

For more information

Questions about the information presented above can be directed to the MPCA at 651-296-6300 or 1-800-657-3864.

Ohuta Beach Phase I Project

Lake City, Minnesota

WSB & Associates, Inc. Project No. 015605-000
Issue Date..... September 11, 2020

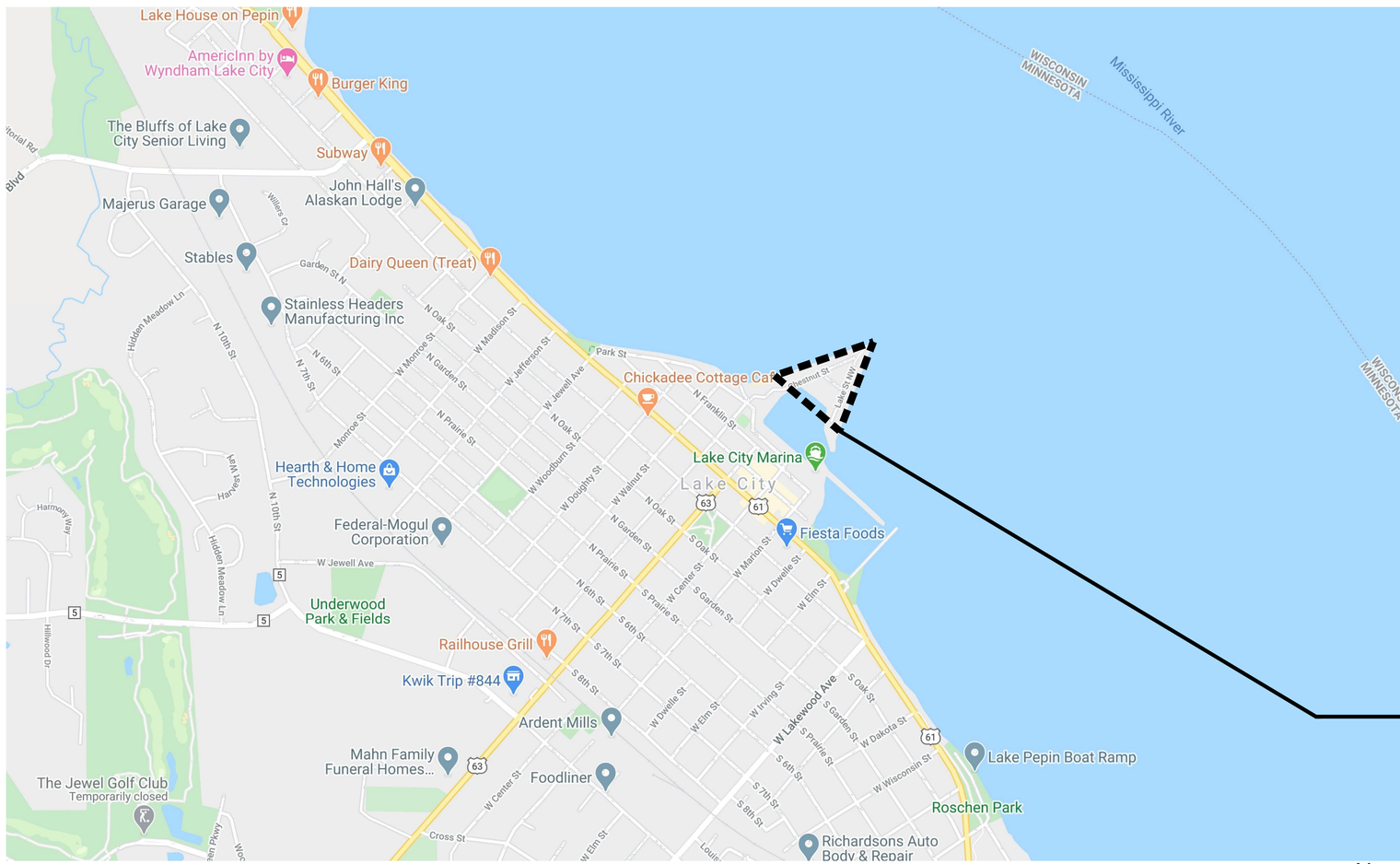

1 L1.0 **PROJECT LOCATION MAP**

N

Sheet List Table	
Sheet Number	Sheet Title
L1.0	COVER SHEET
L2.0	OVERALL REMOVALS PLAN
L3.0	OVERALL LAYOUT PLAN
L4.0	OVERALL GRADING & RESTORATION PLAN
L5.0	EROSION AND PAVEMENT DETAILS
C1.0	OVERALL UTILITY PLAN
C1.1	MISC UTILITY DETAILS
E0.1	ELECTRICAL TITLE SHEET
E1.1	ELECTRICAL SITE PLAN
E2.1	ELECTRICAL DETAILS

THE SUBSURFACE UTILITY INFORMATION SHOWN ON THESE DRAWINGS CONCERNING TYPE AND LOCATION OF PRIVATE UTILITIES HAS BEEN DESIGNATED UTILITY QUALITY LEVEL D. THESE QUALITY LEVELS WERE DETERMINED ACCORDING TO THE GUIDELINES OF CI/ASCE 38-02, ENTITLED "STANDARD GUIDELINES FOR THE COLLECTION AND DEPICTION OF EXISTING SUBSURFACE DATA". THE CONTRACTOR IS TO DETERMINE THE TYPE AND LOCATION OF PRIVATE UTILITIES AS MAY BE DEEMED NECESSARY TO AVOID DAMAGE THERETO.

K:\015605-000\Cad\Plan\#1 BID PACKAGE\015605-000 L-TITL-PLAN_B1.dwg 9/11/2020 1:42:03 PM

wsb

WSB PROJECT NO.: 015605-000

SCALE:	DESIGN BY:
AS SHOWN	JLA
PLAN BY:	CHECK BY:
SDF	JLA

REVISIONS

NO.	DATE	DESCRIPTION

I HEREBY CERTIFY THAT THIS PLAN, SPECIFICATION, OR REPORT WAS PREPARED BY ME OR UNDER MY DIRECT SUPERVISION AND THAT I AM A DULY LICENSED REGISTERED LANDSCAPE ARCHITECT UNDER THE LAWS OF THE STATE OF MINNESOTA.

STEVEN D. FOSS, PLA

DATE: 09/11/2020 LIC. NO.: 56582

OHUTA BEACH PHASE I PROJECT
LAKE CITY, MN

COVER SHEET

SHEET
L1.0

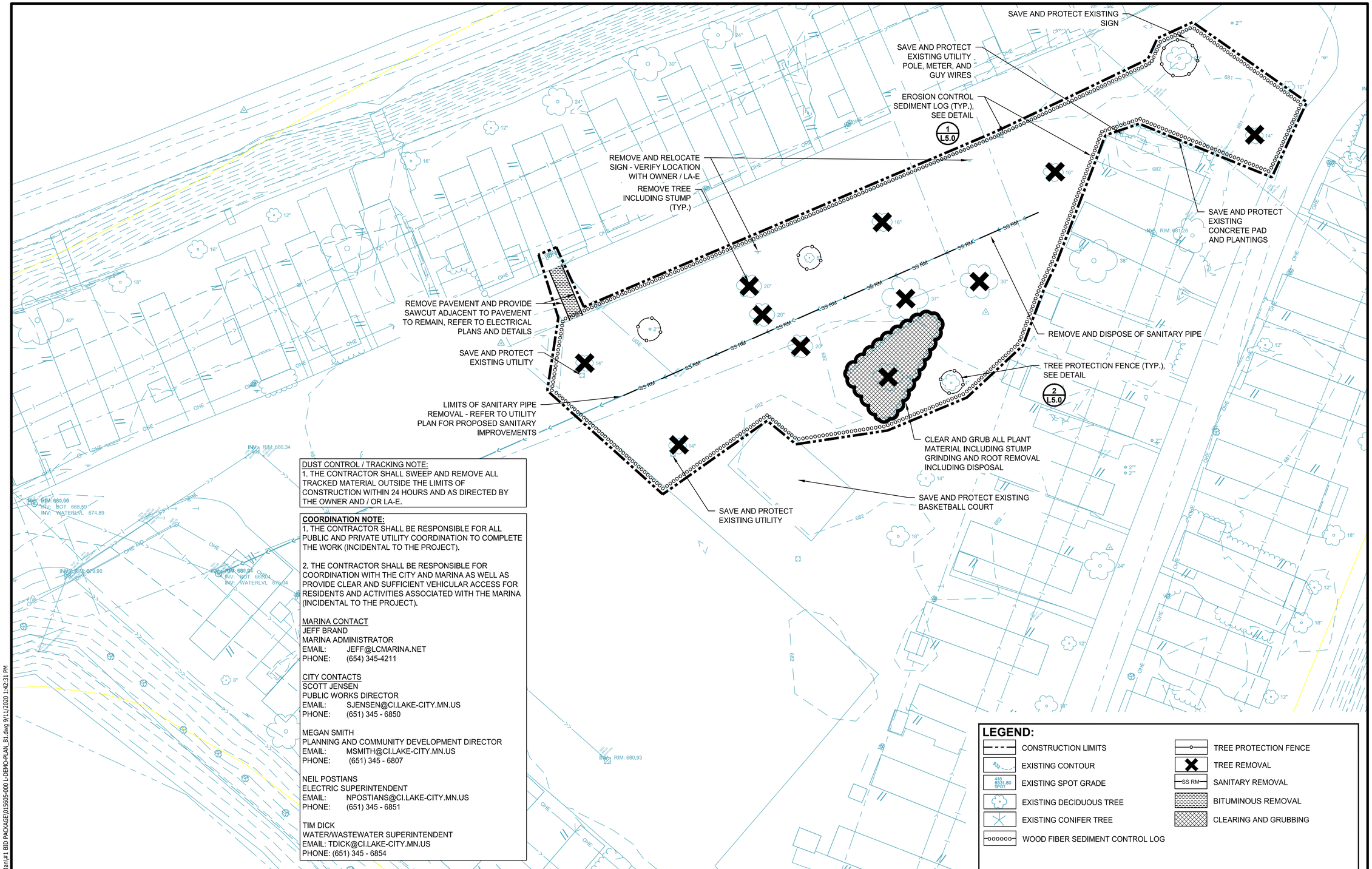

DUST CONTROL / TRACKING NOTE:
1. THE CONTRACTOR SHALL SWEEP AND REMOVE ALL TRACKED MATERIAL OUTSIDE THE LIMITS OF CONSTRUCTION WITHIN 24 HOURS AND AS DIRECTED BY THE OWNER AND / OR LA-E.

COORDINATION NOTE:
1. THE CONTRACTOR SHALL BE RESPONSIBLE FOR ALL PUBLIC AND PRIVATE UTILITY COORDINATION TO COMPLETE THE WORK (INCIDENTAL TO THE PROJECT).

2. THE CONTRACTOR SHALL BE RESPONSIBLE FOR COORDINATION WITH THE CITY AND MARINA AS WELL AS PROVIDE CLEAR AND SUFFICIENT VEHICULAR ACCESS FOR RESIDENTS AND ACTIVITIES ASSOCIATED WITH THE MARINA (INCIDENTAL TO THE PROJECT).

MARINA CONTACT
JEFF BRAND
MARINA ADMINISTRATOR
EMAIL: JEFF@LCMARINA.NET
PHONE: (654) 345-4211

CITY CONTACTS
SCOTT JENSEN
PUBLIC WORKS DIRECTOR
EMAIL: SJENSEN@CI.LAKE-CITY.MN.US
PHONE: (651) 345 - 6850

MEGAN SMITH
PLANNING AND COMMUNITY DEVELOPMENT DIRECTOR
EMAIL: MSMITH@CI.LAKE-CITY.MN.US
PHONE: (651) 345 - 6807

NEIL POSTIANS
ELECTRIC SUPERINTENDENT
EMAIL: NPOSTIANS@CI.LAKE-CITY.MN.US
PHONE: (651) 345 - 6851

TIM DICK
WATER/WASTEWATER SUPERINTENDENT
EMAIL: TDICK@CI.LAKE-CITY.MN.US
PHONE: (651) 345 - 6854

LEGEND:

- CONSTRUCTION LIMITS
- EXISTING CONTOUR
- EXISTING SPOT GRADE (416 SPOT 6531.80)
- EXISTING DECIDUOUS TREE
- EXISTING CONIFER TREE
- WOOD FIBER SEDIMENT CONTROL LOG
- TREE PROTECTION FENCE
- TREE REMOVAL
- SANITARY REMOVAL (SS RM)
- BITUMINOUS REMOVAL
- CLEARING AND GRUBBING

N

0 20 40
SCALE IN FEET

1 / L2.0 **OVERALL REMOVALS PLAN**

K:\015605-000\Cad\Plan\#1 BID PACKAGE\015605-000-L-DEMO-PLAN_B1.dwg 9/11/2020 1:42:31 PM

wsb

WSB PROJECT NO.: 015605-000

SCALE:	DESIGN BY:
AS SHOWN	JLA
PLAN BY:	CHECK BY:
SDF	JLA

REVISIONS

NO.	DATE	DESCRIPTION

I HEREBY CERTIFY THAT THIS PLAN, SPECIFICATION, OR REPORT WAS PREPARED BY ME OR UNDER MY DIRECT SUPERVISION AND THAT I AM A DULY LICENSED LANDSCAPE ARCHITECT UNDER THE LAWS OF THE STATE OF MINNESOTA.

STEVEN D. FOSS, PLA

DATE: 09/11/2020 LIC. NO. 56582

OHUTA BEACH PHASE I PROJECT

LAKE CITY, MN

REMOVALS

SHEET

L2.0

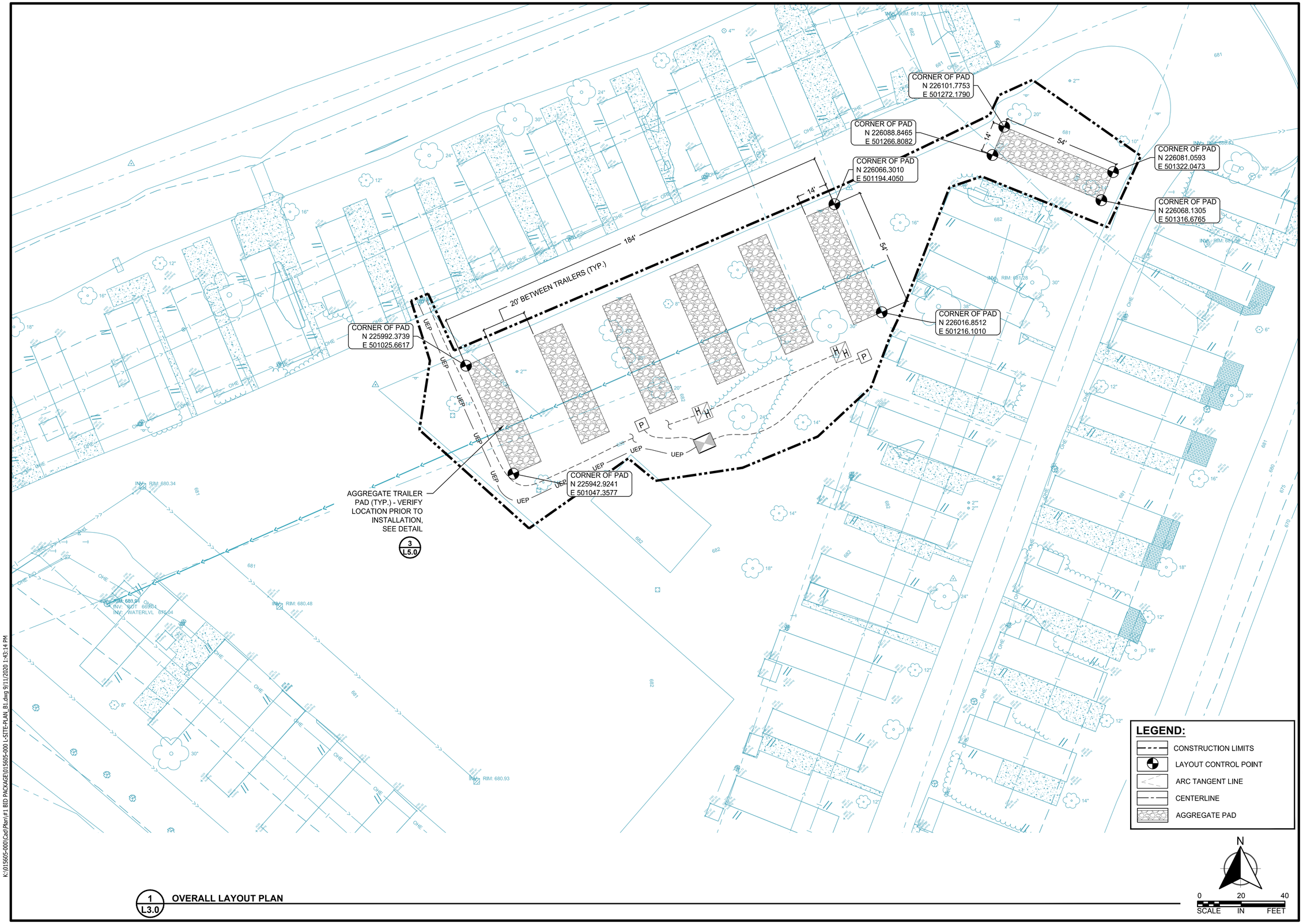

1
L3.0
OVERALL LAYOUT PLAN

K:\015605-000\Cad\Plan\#1 BID PACKAGE\015605-000 L-SITE-PLAN_B1.dwg 9/11/2020 1:43:14 PM

wsb

WSB PROJECT NO.:
015605-000

SCALE:	DESIGN BY:
AS SHOWN	JLA
PLAN BY:	CHECK BY:
SDF	JLA

REVISIONS

NO.	DATE	DESCRIPTION

I HEREBY CERTIFY THAT THIS PLAN, SPECIFICATION, OR REPORT WAS PREPARED BY ME OR UNDER MY DIRECT SUPERVISION AND THAT I AM A DULY LICENSED LANDSCAPE ARCHITECT UNDER THE LAWS OF THE STATE OF MINNESOTA.

STEVEN D. FOSS, PLA

DATE: 09/11/2020 LIC. NO: 56582

OHUTA BEACH PHASE I PROJECT

LAKE CITY, MN

OVERALL LAYOUT PLAN

SHEET

L3.0

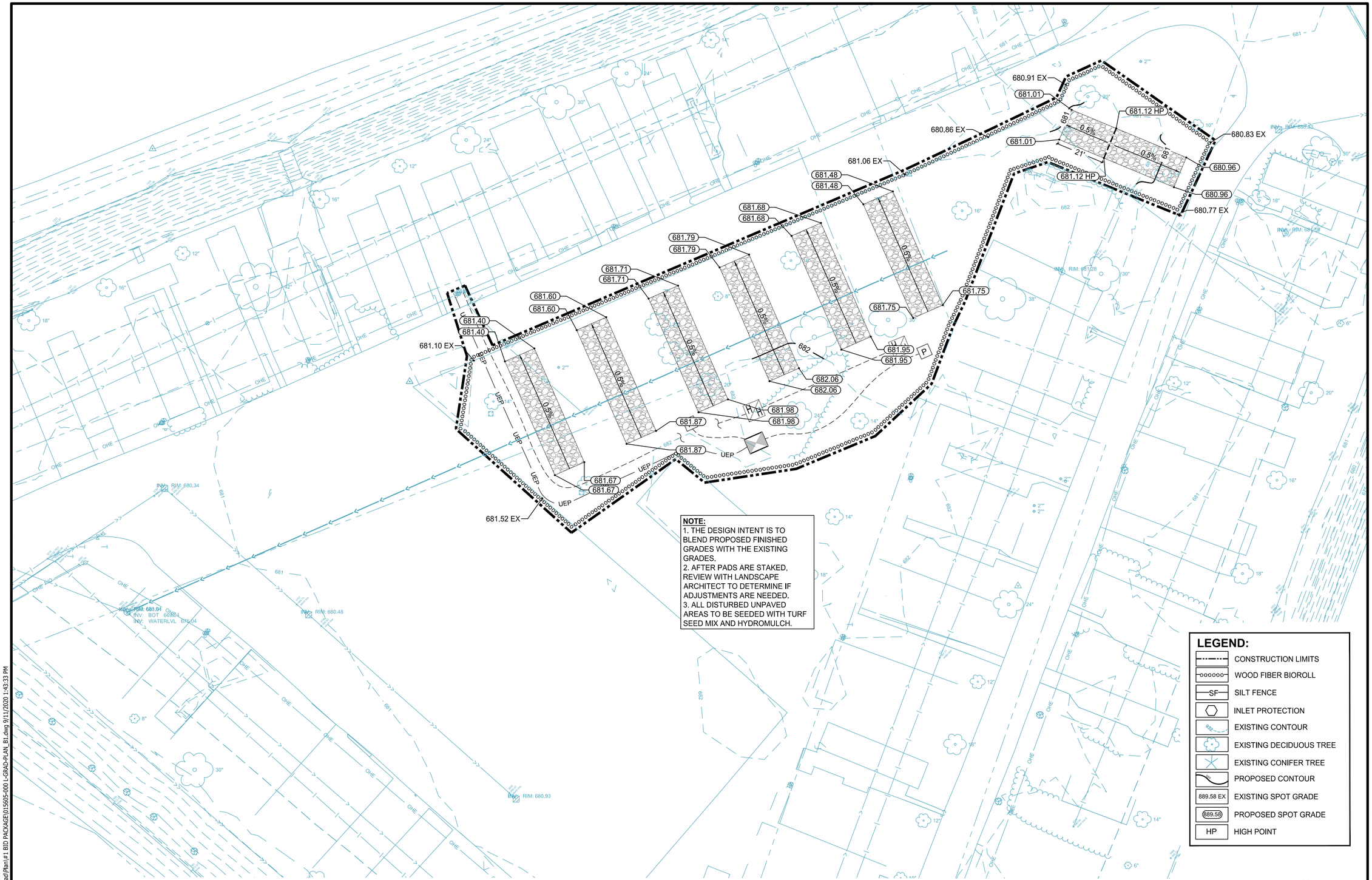

NOTE:
1. THE DESIGN INTENT IS TO BLEND PROPOSED FINISHED GRADES WITH THE EXISTING GRADES.
2. AFTER PADS ARE STAKED, REVIEW WITH LANDSCAPE ARCHITECT TO DETERMINE IF ADJUSTMENTS ARE NEEDED.
3. ALL DISTURBED UNPAVED AREAS TO BE SEEDED WITH TURF SEED MIX AND HYDROMULCH.

LEGEND:

	CONSTRUCTION LIMITS
	WOOD FIBER BIOROLL
SF	SILT FENCE
	INLET PROTECTION
880	EXISTING CONTOUR
	EXISTING DECIDUOUS TREE
	EXISTING CONIFER TREE
	PROPOSED CONTOUR
889.58 EX	EXISTING SPOT GRADE
889.58	PROPOSED SPOT GRADE
HP	HIGH POINT

N

0 20 40
SCALE IN FEET

1 / L4.0 **OVERALL GRADING & RESTORATION PLAN**

K:\015605-000\Cad\Plan\#1 BID PACKAGE\015605-000 L-GRAD-PLAN_B1.dwg 9/11/2020 1:43:33 PM

wsb

WSB PROJECT NO.: 015605-000

SCALE:	DESIGN BY:
AS SHOWN	JLA
PLAN BY:	CHECK BY:
SDF	JLA

REVISIONS

NO.	DATE	DESCRIPTION

I HEREBY CERTIFY THAT THIS PLAN, SPECIFICATION, OR REPORT WAS PREPARED BY ME OR UNDER MY DIRECT SUPERVISION AND THAT I AM A DULY LICENSED LANDSCAPE ARCHITECT UNDER THE LAWS OF THE STATE OF MINNESOTA.

STEVEN D. FOSS, PLA

DATE: 09/11/2020 LIC. NO: 56582

OHUTA BEACH PHASE I PROJECT

LAKE CITY, MN

GRADING & RESTORATION

SHEET

L4.0

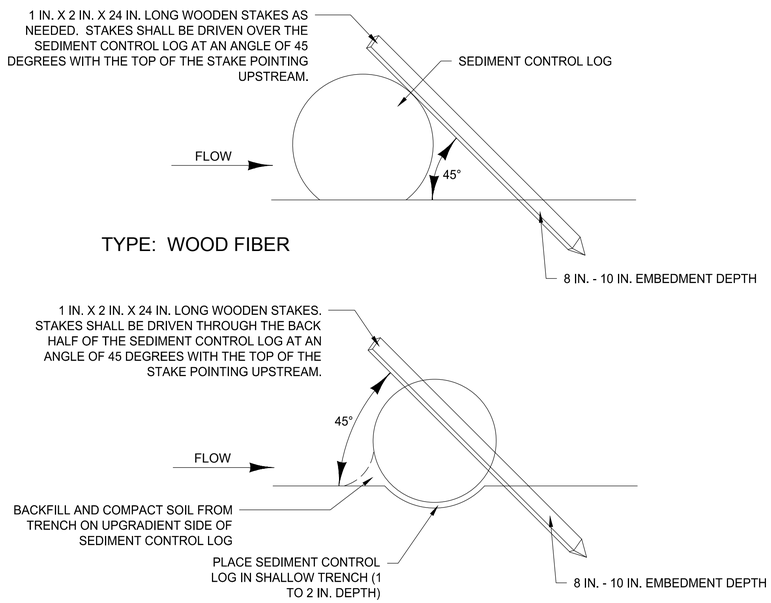

1 / L5.0 SEDIMENT CONTROL LOG DETAIL
SCALE: NTS

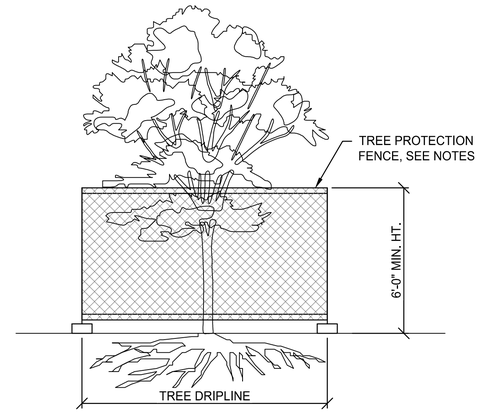

NOTES:
1. 6-FT. HIGH TEMPORARY CHAIN LINK FENCE SHALL BE PLACED AT THE DRIPLINE OF THE TREE TO BE SAVED. FENCE SHALL COMPLETELY ENCIRCLE THE TREE(S). INSTALL FENCE POSTS USING PIER BLOCKS ONLY. AVOID DRIVING POSTS OR STAKES INTO MAJOR ROOTS.
2. FOR ROOTS OVER 1-IN DIA. THAT ARE DAMAGED DURING CONSTRUCTION, MAKE A CLEAN, STRAIGHT CUT TO REMOVE THE DAMAGED PORTION. ALL EXPOSED ROOTS SHALL BE TEMPORARILY COVERED WITH DAMP BURLAP TO PREVENT DRYING, AND SHALL BE COVERED WITH SOIL AS SOON AS POSSIBLE.
3. WORK WITHIN PROTECTION FENCE SHALL BE DONE MANUALLY. NO STOCKPILING OF MATERIALS, VEHICULAR TRAFFIC, OR STORAGE OF EQUIPMENT OR MACHINERY SHALL BE ALLOWED WITHIN THE LIMIT OF THE FENCING.

2 / L5.0 TREE PROTECTION FENCE DETAIL
SCALE: NTS

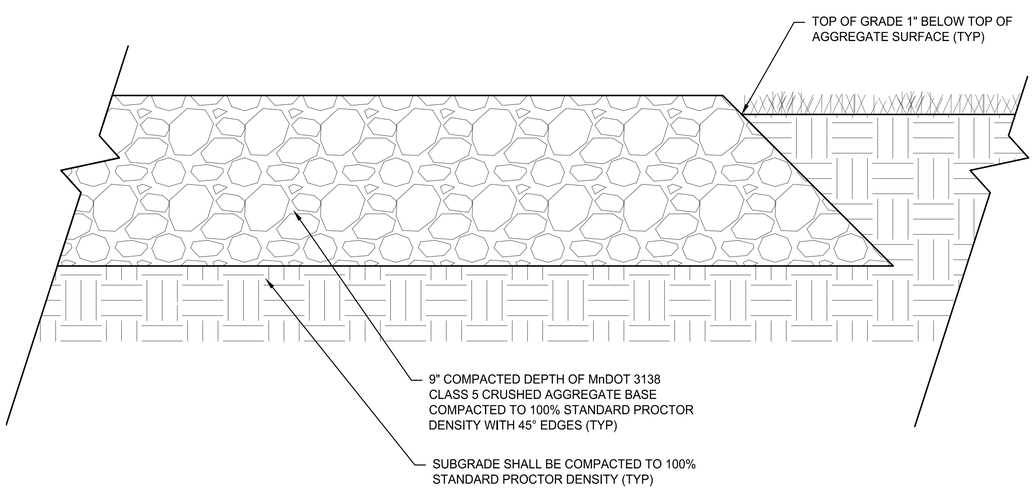

3 / L5.0 AGGREGATE TRAILER PAD DETAIL
SCALE: NTS

K:\015605-000\Cad\Plan\#1 BID PACKAGE\015605-000 L-DETL_B1.dwg 9/11/2020 1:44:02 PM

wsb

WSB PROJECT NO.: 015605-000

SCALE:	DESIGN BY:
AS SHOWN	JLA
PLAN BY:	CHECK BY:
SDF	JLA

REVISIONS

NO.	DATE	DESCRIPTION

I HEREBY CERTIFY THAT THIS PLAN, SPECIFICATION, OR REPORT WAS PREPARED BY ME OR UNDER MY DIRECT SUPERVISION AND THAT I AM A DULY LICENSED LANDSCAPE ARCHITECT UNDER THE LAWS OF THE STATE OF MINNESOTA.

STEVEN D. FOSS, PLA

DATE: 09/11/2020 LIC. NO: 56582

OHUTA BEACH PHASE I PROJECT

LAKE CITY, MN

EROSION AND PAVEMENT DETAILS

SHEET

L5.0

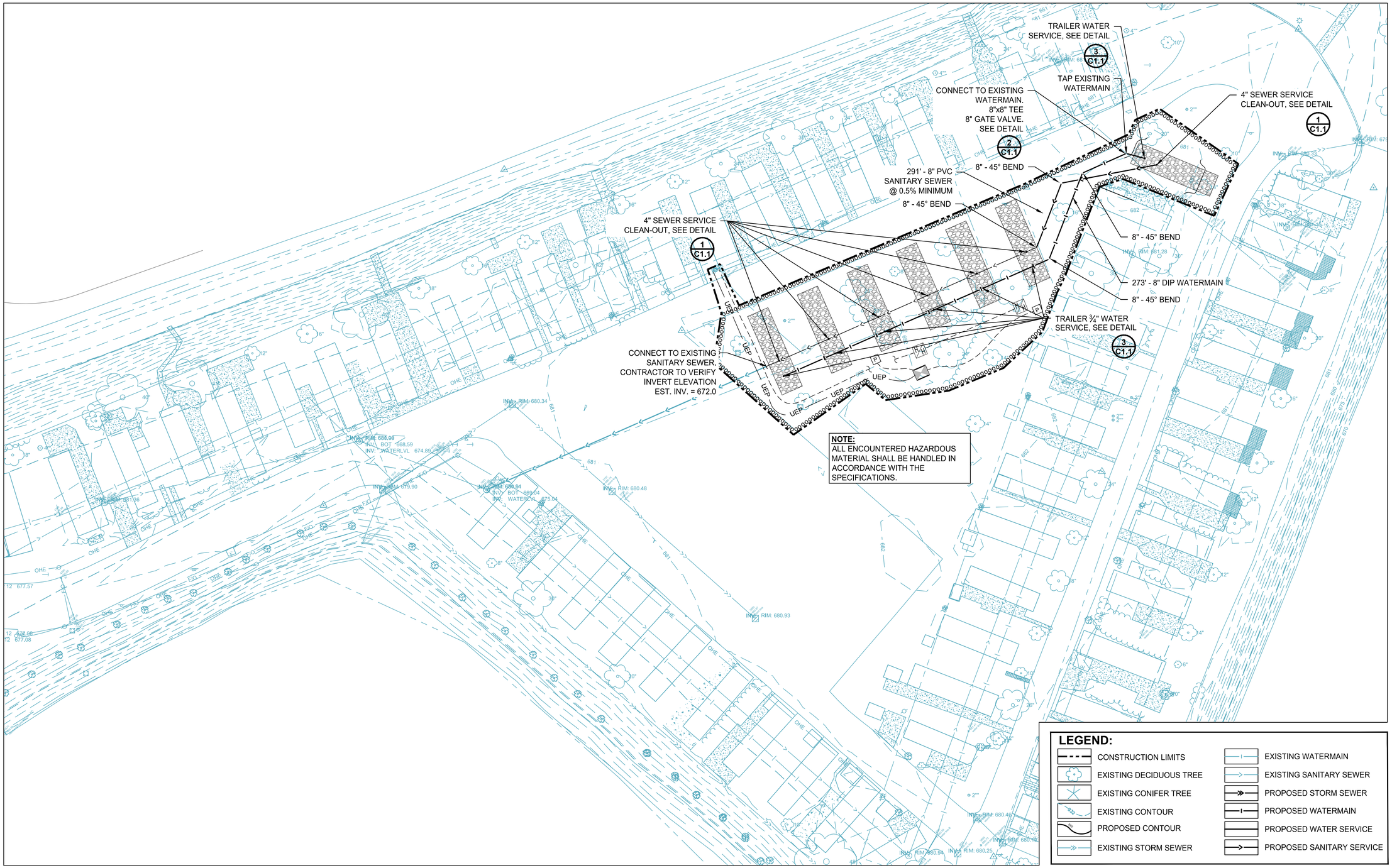

1 C1.0 **OVERALL UTILITY PLAN**

K:\015605-000\Cad\Plan\#1 BID PACKAGE\015605-000-C-UTIL-PLAN_B1.dwg 9/11/2020 1:44:18 PM

wsb

WSB PROJECT NO.: 015605-000

SCALE:	DESIGN BY:
AS SHOWN	JS
PLAN BY:	CHECK BY:
JS	JS

REVISIONS

NO.	DATE	DESCRIPTION

I HEREBY CERTIFY THAT THIS PLAN, SPECIFICATION, OR REPORT WAS PREPARED BY ME OR UNDER MY DIRECT SUPERVISION AND THAT I AM A DULY LICENSED PROFESSIONAL ENGINEER UNDER THE LAWS OF THE STATE OF MINNESOTA.

JAMES SOLTIS, PE

DATE: 09/11/2020 LIC. NO: 54823

OHUTA BEACH PHASE I PROJECT

LAKE CITY, MN

UTILITIES

SHEET

C1.0

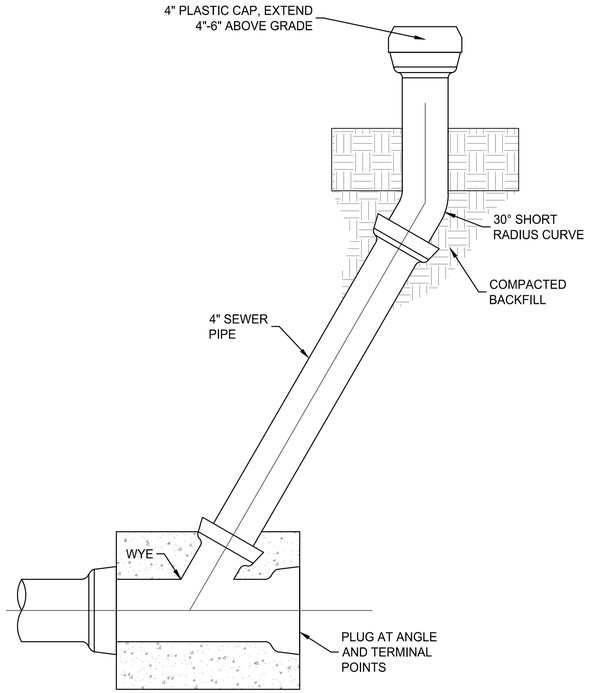

SECTION

1 C1.1 SANITARY SERVICE CLEANOUT
SCALE: NO SCALE

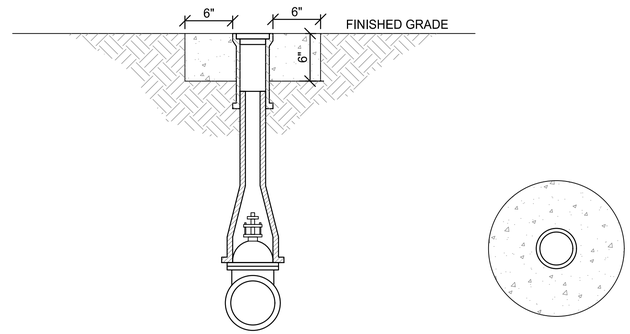

SECTION

PLAN

2 C1.1 WATER VALVE AND BOX
SCALE: NO SCALE

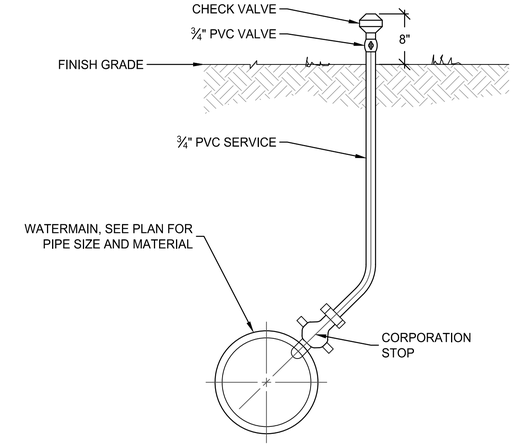

3 C1.1 CORP. STOP VALVE AND SERVICE
SCALE: NO SCALE

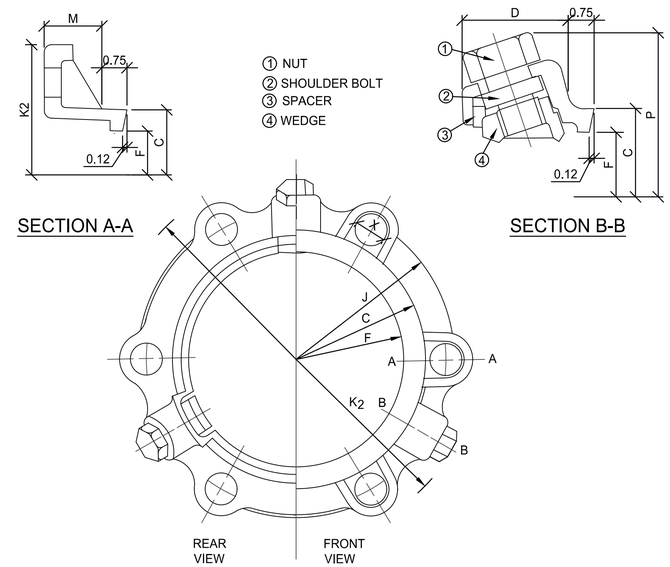

SECTION A-A

SECTION B-B

SERIES	C	D	F	J	M	X	NO. OF WEDGES	NO. OF BOLTS	P	P W/NUTS TWISTED OFF	K_2
1103	4.84	2.27	4.06	6.19	0.62	3/4	2	4	9.36	9.06	7.69
1104	5.92	2.27	4.90	7.50	0.75	7/8	2	4	10.20	9.90	9.12
1106	8.02	2.27	7.00	9.50	0.88	7/8	3	6	12.30	12.00	11.12
1108	10.17	2.31	9.15	11.75	1.00	7/8	4	6	14.45	14.15	13.37
1110	12.22	2.37	11.20	14.00	1.00	7/8	6	8	16.50	16.20	15.62
1112	14.32	2.37	13.30	16.25	1.25	7/8	8	8	18.60	18.30	17.88
1114	16.40	2.69	15.44	18.75	1.50	7/8	10	10	20.64	20.94	20.25
1116	18.50	2.69	17.54	21.00	1.56	7/8	12	12	22.60	22.90	24.75
1118	20.60	2.69	19.64	23.25	1.63	7/8	12	12	24.70	25.00	27.00
1120	22.70	2.69	21.74	25.50	1.69	7/8	14	14	26.80	27.10	31.30
1124	26.90	3.20	25.94	30.00	1.81	7/8	16	16	32.94	32.64	32.64
1130	33.29	3.20	32.17	36.88	2.25	1-1/8	20	20	39.17	38.87	39.12
1136	39.59	3.20	38.47	43.75	2.25	1-1/8	24	24	45.47	45.17	46.00
1142	45.79	4.56	44.67	50.62	3.88	1-3/8	28	28	55.87	55.57	53.48
1148	52.09	4.56	50.97	57.50	3.88	1-3/8	32	32	62.17	61.87	60.36

5 C1.1 MEGALUG SERIES 1100 MECHANICAL JOINT RESTRAINT
SCALE: NO SCALE

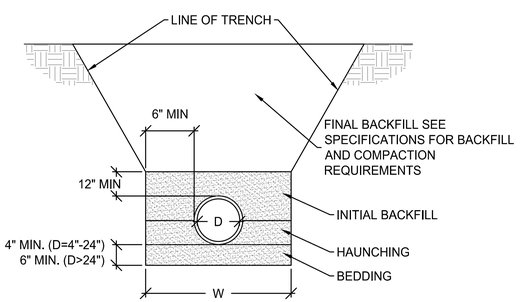

D	W
4"	21"
6"	23"
8"	26"
10"	28"
12"	31"
15"	34"
18"	39"
24"	48"

NOTES:

1. WHERE TRENCH BOTTOM IS UNSTABLE, THE CONTRACTOR SHALL EXCAVATE TO A DEPTH REQUIRED BY THE ENGINEER AND REPLACE WITH A FOUNDATION OF CLASS I OR II MATERIAL AS DEFINED IN ASTM D2321, LATEST EDITION
2. HAUNCHING AND INITIAL BACKFILL SHALL BE CLASS I, II OR III AND INSTALLED AS REQUIRED IN ASTM D2321, LATEST EDITION.
3. MINIMUM COVER = 12" TO FINISH GRADE SURFACE MOUND AND COMPACT TO 48" COVER DURING CONSTRUCTION

4 C1.1 PVC/HDPE PIPE BEDDING
SCALE: NO SCALE

K:\015605-000\Cad\Plan\#1 BID PACKAGE\015605-000 C-UTIL-PLAN_B1.dwg 9/11/2020 1:44:28 PM

wsb

WSB PROJECT NO.:
015605-000

SCALE:	DESIGN BY:
AS SHOWN	JS
PLAN BY:	CHECK BY:
JS	JS

REVISIONS

NO.	DATE	DESCRIPTION

I HEREBY CERTIFY THAT THIS PLAN, SPECIFICATION, OR REPORT WAS PREPARED BY ME OR UNDER MY DIRECT SUPERVISION AND THAT I AM A DULY LICENSED PROFESSIONAL ENGINEER UNDER THE LAWS OF THE STATE OF MINNESOTA.

JAMES SOLTIS, PE

DATE: 09/11/2020 LIC. NO.: 54823

OHUTA BEACH PHASE I PROJECT

LAKE CITY, MN

UTILITIES

SHEET

C1.1

OHUTA BEACH
PHASE 1 PROJECT

LAKE CITY, MINNESOTA

ELECTRICAL DRAWINGS

SITE LOCATION

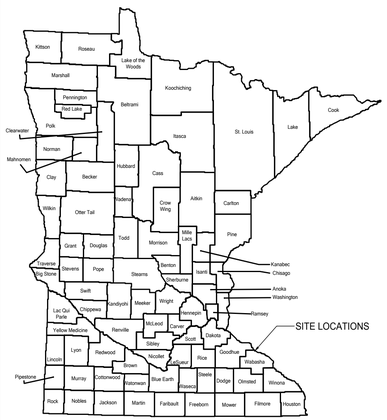

NOT TO SCALE

ELECTRICAL SYMBOL LEGEND

SYMBOL	LIGHTING SYSTEM
	SURFACE, BOLLARD LIGHT FIXTURE
	RECESSED LIGHT FIXTURE
	WALL LIGHT FIXTURE
	FLOOD LIGHT
	LIGHTING TRACK W/ FIXTURE HEADS
	POLE MOUNTED

SYMBOL	POWER AND SWITCHING SYSTEMS
	WEATHER PROOF GROUND FAULT INTERRUPTING RECEPTACLE
	SPECIAL PURPOSE RECEPT. AS NOTED ON DWGS.
	PHOTO SENSOR
	DIMMER OR DIMMER CONTROL
	PUSH BUTTON
	SINGLE POLE SWITCH
P	POWER PEDESTAL

SYMBOL	EQUIPMENT SYSTEMS
	BRANCH CIRCUIT PANELS (250V OR LESS)
	BRANCH CIRCUIT PANELS (277/480V)
	DISTRIBUTION PANEL OR SWITCHBOARD
	SWITCHBOARD MAIN
	DRY TYPE TRANSFORMER - SIZE AS NOTED ON DRAWING
	DISCONNECT SWITCH
	MAGNETIC MOTOR STARTER
	DISCONNECT SWITCH & MAGNETIC MOTOR STARTER IN SAME LOCATION
	AUXILIARY EQUIPMENT (AS NOTED)
3 3	JUNCTION BOX
MH	MANHOLE
HH	HAND HOLE
	GOUNDING SYSTEM BUS BAR

SYMBOL	WIRING SYSTEMS
#10	INDICATES WIRE SIZE. IF NOT NOTED #12 AWG CONDUCTORS SHALL BE USED
	HOME RUN
	NOTE: ANY CIRCUITS WITHOUT FURTHER DESIGNATION IS A TWO WIRE CIRCUIT. A GREATER NUMBER OF WIRES ARE INDICATED BY CROSS MARKS
LP-1/3	PANELBOARD/CIRCUIT NUMBER
A H1/12	FIXTURE TYPE; SPORTS LIGHTING ASSEMBLY; PANEL NAME; CIRCUIT NUMBER
	GROUNDING CONDUCTOR; HOT CONDUCTOR; NEUTRAL CONDUCTOR
	CONDUIT CAPPED OR BUSHED
	CONDUIT CONTINUATION
	BRANCH CIRCUIT (UNDER FLOOR OR UNDER GROUND)
	GROUND

SYMBOL	MISC. DEVICES
2	INDICATES NOTE ON PLAN
4	RELAY NUMBER
	MECHANICAL EQUIPMENT CROSS REFERENCE (NO. REFERS TO SCHEDULE).

LINETYPE LEGEND	
	NEW FIXTURE
	EXISTING FIXTURE TO BE REMOVED
	EXISTING FIXTURE TO REMAIN OR BE REUSED
	NEW DEVICE
	EXISTING DEVICE TO BE REMOVED
	EXISTING DEVICE TO REMAIN OR BE REUSED
	NEW DEVICE
	EXISTING DEVICE TO BE REMOVED
	EXISTING DEVICE TO REMAIN OR BE REUSED

ELECTRICAL ABBREVIATIONS

A,C	ALTERNATING CURRENT
AC	ABOVE COUNTER
AFF	ABOVE FINISH FLOOR
AMP	AMPERE
ARCH	ARCHITECTURAL
ASC	ADJUSTABLE SPEED CONTROLLER
ATS	AUTOMATIC TRANSFER SWITCH
AUTO	AUTOMATIC
AWG	AMERICAN WIRE GAUGE
BC	BELOW COUNTER
BRKR	BREAKER
BSMT	BASEMENT
C	CONDUIT, CABLE
CAB	CABINTET
CAP	CAPACITOR
CB	CIRCUIT BREAKER
CCT	CIRCUIT
CCTV	CLOSED CIRCUIT TELEVISION
CLG	CEILING
CON	CONSOLE TELEPHONE
CP	CHILDPROOF
CPT	CONTROL POWER TRASFORMER
CR & SA	COMO RESEARCH & SERVICE
CT	CURRENT TRANSFORMER
CU	COPPER
D	DESK MOUNDED
DISC	DISCONNECT
DISTR	DISTRIBUTION
DPDT	DOUBLE POLE, DOUBLE THROW
DPST	DOUBLE POLE, SINGLE THROW
DWG	DRAWING
EA	EACH
ELEC	ELECTRIC/ELECTRICAL
EMERG	EMERGENCY
EMS	ENERGY MANAGEMENT SYSTEM
EP	ELECTRICAL PNEUMATIC VALVE
EXIST	EXISTING
EWC	ELECTRIC WATER COOLER
EWH	ELECTRIC WATER HEATER
F	FUSED (D)
FA	FIRE ALARM
FAAP	FIRE ALARM ANNUNCIATOR PANEL
FC	FUSED CONTACT
FACP	FIRE ALARM CONTROL PANEL
FIXT	FIXTURE
FL	FLUSH
FLOUR	FLUORESCENT
FS	FUSED SWITCH
F-STAT	FREEZE STAT
GEN	GENERATOR
GB	GROUND BUS
GFI	GROUND FAULT INTERRUPTING
GND	GROUND
GYP	GYPSUM BOARD
HDCP	HANDICAPPED
HTR	HEATER
H-O-A	HAND-OFF-AUTOMATIC
HH	HAND HOLE
HP	HORSEPOWER
HT	HEIGHT
HZ	HERTZ
IMC	INTERMEDIATE METALLIC CONDUIT
INCAND	INCANDESCENT
JB	JUNCTION BOX
JCT	JUNCTION

KCMIL	THOUSAND CIRCULAR MILS
KV	KILOVOLT
KVA	KILOVOLT AMPERE
KVAR	KILOVOLT AMPERE REACTIVE
KW	KILOWATT
LA	LIGHTING ARRESTOR
LTG	LIGHTING
MCC	MOTOR CONTROL CENTER
MCM	THOUSAND CIRCULAR MILS
MECH	MECHANICAL
MEZZ	MEZZANINE
MFR	MANUFACTURE
MH	MAN HOLE
ML	MULTILINE
MLO	MAIN LUGS ONLY
MMS	MANUAL MOTOR SWITCH (OVERLOADS)
MS	MOTOR SWITCH
MS & P	MOTOR SWITCH & PILOT
MTD	MOUNTED
MTG	MOUNTING
MTR	MOTOR
MTRS	MOTORS
NC	NORMALLY CLOSED
NEU	NEUTRAL
NF	NON-FUSED
NIC	NOT IN CONTRACT
NL	NIGHT LIGHT
NO	NORMALLY OPEN
NTS	NOT TO SCALE
OC	ON CENTER
P	POLE
PA	PUBLIC ADDRESS SYSTEM
PE SWITCH	PNEUMATIC ELECTRIC
PF	POWER FACTOR
PH(~)	PHASE
PNL	PANEL
PP	POWER POLE
PVC	POLYVINYL CHLORIDE
PWR	POWER
QTY	QUANTITY
REC	RECESSED
RM	ROOM
RL	RELOCATE
S	SURGE SUPPRESSION RECEPTACLE
SHT	SHEET
SPEC	SPECIFICATION
SPKR	SPEAKER
SPST	SINGLE POLE, SINGLE THROW
SW	SWITCH
SWBD	SWITCHBOARD
SV	SOLENOID VALVE
SYS	SYSTEM
TEL	TELEPHONE
TERM	TERMINAL
TFMR(T)	TRANSFORMER
T-STAT	THERMOSTAT
TV	TELEVISION
TYP	TYPICAL
W	WATT
W/	WITH
W/O	WITHOUT
WP	WEATHERPROOF
UEP	UNDERGROUND ELECTRIC PRIMARY
UES	UNDERGROUND ELECTRIC SECONDARY
V	VOLT
VA	VOLT AMPERE
VM	VOLTMETER
VS	VOLTMETER SWITCH
X	EXISTING
XC	EXISTING DEVICE TO BE REMOVED
XFMR	TRANSFORMER
XR	EXISTING TO BE RELOCATED

GENERAL NOTES

1. BRANCH CIRCUIT DESIGNATIONS AS INDICATED ON THESE DRAWINGS ARE FOR CLARIFICATION ONLY AND DO NOT REPRESENT EXACT CIRCUIT DESIGNATIONS IN THE PANELS SERVING THE REMODELED AREA. EXACT LOCATIONS AND/OR DESIGNATIONS SHALL BE ADJUSTED AS REQUIRED TO PROVIDE BALANCED LOADING OF ALL THE PHASES IN THE PANEL.
2. ALL FIXTURES INDICATED FOR NIGHT LIGHTING FUNCTION SHALL BE CONNECTED TO THE CONTINUOUSLY ENERGIZED PORTION OF THE ROOM LIGHTING BRANCH CIRCUIT.
3. VERIFY LOCATION OF ALL MOTORS WITH MECHANICAL SUBCONTRACTOR PRIOR TO ROUGH-IN.
4. INSTALLATION OF ALL FIXTURES SHALL COMPLY WITH ALL INTERNATIONAL BUILDING CODE REQUIREMENTS.
5. WHEREVER THE INSTALLATION OF ELECTRICAL EQUIPMENT CONFLICTS WITH EXISTING CONDITIONS NOT SHOWN ON THE PLANS OR SPECIFICATIONS, THE CONTRACTOR SHALL DETERMINE A SATISFACTORY ALTERNATIVE MEANS FOR INSTALLATION AND VERIFY IT WITH THE ENGINEER PRIOR TO INSTALLATION.
6. WHERE ELECTRICAL DEVICES ARE LOCATED ADJACENT TO LIGHT SWITCHES, MOUNT ALL DEVICES AT THE SAME ELEVATION. OR LINE OF PLUMB.
7. ALL LIGHTING FIXTURES LOCATED IN A FIRE RATED CEILING SHALL BE ENCLOSED OR SURROUNDED IN A FIRE PROTECTION MATERIAL. PROTECTION MATERIAL SHALL BE INSTALLED PER FIRE RESISTANCE INDEX. VERIFY WITH THE ARCHITECTURAL DRAWINGS AS TO THE WALL AND CEILING RATINGS.
8. FINAL CONNECTIONS TO EQUIPMENT SHALL BE PER MANUFACTURERS APPROVED WIRING DIAGRAMS, DETAILS AND INSTRUCTIONS. IT SHALL BE THE CONTRACTORS RESPONSIBILITY TO PROVIDE MATERIALS AND EQUIPMENT COMPATIBLE WITH EQUIPMENT ACTUALLY SUPPLIED.

INDEX TO ELECTRICAL SHEETS

E0.1 ELECTRICAL TITLE SHEET

E1.1 SITE PLAN - ELECTRICAL

E2.1 ELECTRICAL - DETAILS

edi-dolejs
consulting engineers
minneapolis | mankato
1112 North 5th Street Minneapolis, MN 55411 (612) 343-5965
1624 North Riverfront Drive Mankato, MN 56001 (507) 625-7869

wsb
WSB PROJECT NO.: 015605-000

SCALE:	DESIGN BY:
AS SHOWN	LDB
PLAN BY:	CHECK BY:
LLA	LDB

REVISIONS

NO.	DATE	DESCRIPTION

I HEREBY CERTIFY THAT THIS PLAN, SPECIFICATION, OR REPORT WAS PREPARED BY ME OR UNDER MY DIRECT SUPERVISION AND THAT I AM A DULY LICENSED PROFESSIONAL ENGINEER UNDER THE LAWS OF THE STATE OF MINNESOTA.

JAY S. HRUBY P.E.

DATE: 09/11/2020 LIC. NO: 40290

OHUTA BEACH PHASE 1 PROJECT

LAKE CITY

TITLE SHEET
ELECTRICAL

C.P. XXXXXXX

SHEET E0.1

EDI-DOLEJS #20-046

P:\20-046 - Lake City - Ohuta Beach\1-Design\1-Electrical\Drawings\PHASE 1\E0-1.dwg 9/10/2020 3:31:38 PM

PLAN NOTES:

1. UTILITY PAD MOUNTED TRANSFORMER TO BE INSTALLED ON CONTRACTOR FURNISHED CONCRETE PAD. SEE DETAIL 3/E3.1 FOR PAD DETAILS. PAD TO BE ELEVATED TO DATUM POINT 683.9 APPROXIMATELY 2-FEET ABOVE EXISTING LEVEL. COORDINATE WITH UTILITY FOR FURTHER DETAILS AND CONDUIT LOCATIONS IN PAD.
2. CONTRACTOR TO FURNISH AND INSTALL ONE (1) 3" PVC CONDUIT UNDERGROUND AND UP POLE FOR INSTALLATION OF UTILITY PRIMARY CABLE. SEE DETAIL 2/E3.1 FOR TRENCH DETAILS.
3. FURNISH AND INSTALL A SERVICE ENTRANCE METERING PEDESTAL 22KA AIC RATING WITH FOUR (4) METER SOCKETS FOR SERVICE FEEDS EACH WITH A 200-AMP MAIN BREAKER. UNIT TO BE POST MOUNTED. UNIT TO BE SIMILAR TO MIDWEST MH420B0 WITH P2 POST GRAY. PROVIDE A MAIN GROUND AT EACH PEDESTAL. REFER TO DETAIL 1/E3.1 FOR MORE DETAILS.
4. PROVIDE NEW 200-AMP 240/120-VOLT, 3-WIRE UNDERGROUND CIRCUIT FEED FROM NEW UTILITY INSTALLED PAD MOUNTED TRANSFORMER. UTILIZE THREE (3) 3/0 AWG PLUS #2 AWG GROUND IN 2-1/2" PVC CONDUIT COORDINATE WITH UTILITY.
5. PROVIDE 2" CONDUIT FROM BOTTOM OF POLE TO MANHOLES AS SHOWN FOR COMMUNICATION/DATA CIRCUITS. TERMINATE IN HANDHOLE TYPE QUAZITE #PC1324BA24 OR EQUAL COMPLETE WITH BOLTED COVER AND "COMMUNICATIONS" LOGO SUITABLE FOR OFF ROAD APPLICATIONS.

1 SITE PLAN - ELECTRICAL
SCALE: 1" = 40'-0"

GRAPHIC SCALE 0 40'

NORTH

edi-dolejs consulting engineers
minneapolis | mankato
1112 North 5th Street Minneapolis, MN 55411 (612) 343-5965
1624 North Riverfront Drive Mankato, MN 56001 (507) 625-7869

P:\20-046 - Lake City - Ohuta Beach\1-Design\1-Electrical\Drawings\PHASE 1\E1-1.dwg 9/11/2020 10:35:50 AM

wsb

WSB PROJECT NO.: 015605-000

SCALE:	DESIGN BY:
AS SHOWN	LDB
PLAN BY:	CHECK BY:
LLA	LDB

REVISIONS

NO.	DATE	DESCRIPTION

I HEREBY CERTIFY THAT THIS PLAN, SPECIFICATION, OR REPORT WAS PREPARED BY ME OR UNDER MY DIRECT SUPERVISION AND THAT I AM A DULY LICENSED PROFESSIONAL ENGINEER UNDER THE LAWS OF THE STATE OF MINNESOTA.

JAY S. HRUBY P.E.

DATE: 09/11/2020 LIC. NO: 40290

OHUTA BEACH PHASE 1 PROJECT

LAKE CITY

SITE PLAN ELECTRICAL

C.P. XXXXXXX

SHEET E1.1

EDI-DOLEJS #20-046

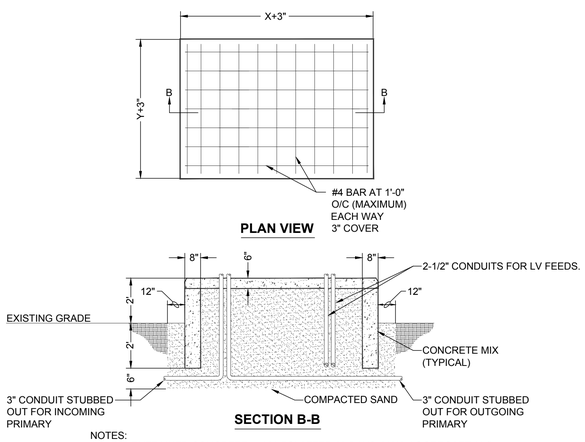

NOTES:

1. AIR ENTRAINED CONCRETE - 4000 PSI AFTER 28 DAYS, MAX. AGGREGATE 3/4".
2. STEEL FLOAT FINISH.
3. REINFORCEMENT: TYPE ASTM A775 EPOXY COATED REBAR A.S.T.M. GRADE 60.
4. ALL REINFORCING TO BE #4 BAR 12" O.C. EACH WAY. WIRE TIE ALL CROSSINGS.
5. IF THE ANTICIPATED FORECAST TEMPERATURE IS 35 DEGREES F OR LESS, THE PAD WILL BE INSULATED WITH EITHER BLANKETS OR POLY AND STRAW FOR A MIN. OF 3 DAYS.
6. APPLY MEMBRANE CURING COMPOUND.
7. EDGE TROWEL WITH CHAMFERED OUTSIDE EDGES.
8. DIMENSIONS X/Y REPRESENT EQUIPMENT FOOT PRINT DIMENSIONS.

3 TRANSFORMER PAD DETAIL

SCALE: NTS

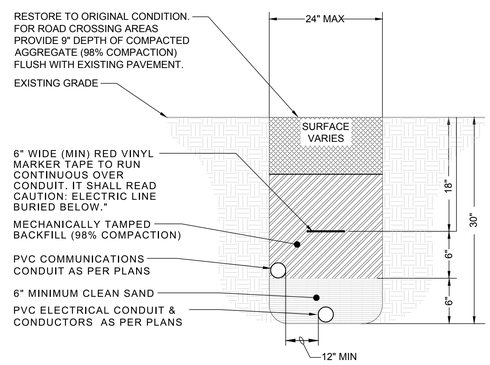

2 TRENCH DETAIL

SCALE: NTS

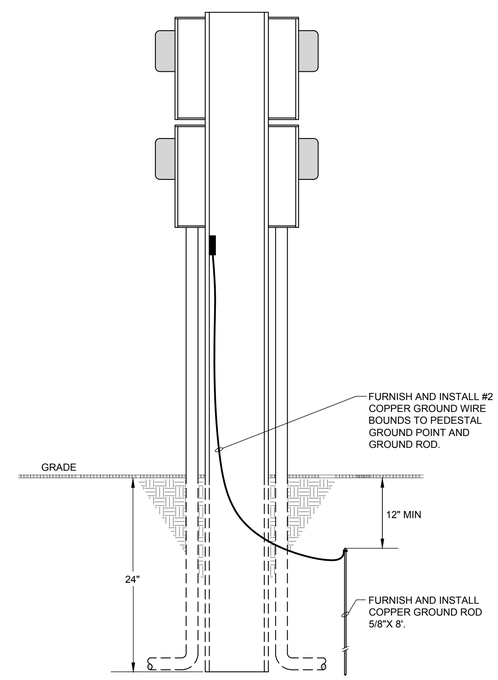

1 SERVICE PEDESTAL DETAIL

SCALE: NTS

wsb

WSB PROJECT NO.: 015605-000

SCALE:	DESIGN BY:
AS SHOWN	LDB
PLAN BY:	CHECK BY:
LLA	LDB

REVISIONS

NO.	DATE	DESCRIPTION

I HEREBY CERTIFY THAT THIS PLAN, SPECIFICATION, OR REPORT WAS PREPARED BY ME OR UNDER MY DIRECT SUPERVISION AND THAT I AM A DULY LICENSED PROFESSIONAL ENGINEER UNDER THE LAWS OF THE STATE OF MINNESOTA.

JAY S. HRUBY P.E.

DATE: 09/11/2020 LIC. NO: 40290

OHUTA BEACH PHASE 1 PROJECT

LAKE CITY

ELECTRICAL - DETAILS

C.P. XXXXXXX

SHEET E2.1

EDI-DOLEJS #20-046

edi-dolejs consulting engineers
minneapolis | mankato
1112 North 5th Street Minneapolis, MN 55411 (612) 343-5965
1624 North Riverfront Drive Mankato, MN 56001 (507) 625-7869

P:\20-046 - Lake City - Ohuta Beach\1-Design\1-Electrical\Drawings\PHASE 1\E2-1.dwg 9/10/2020 3:32:10 PM